RESEARCH ARTICLE OPEN ACCESS

Bidirectional Isolated DC-DC Converter for Hybrid Electric Vehicle Charging

M.Siva Ramkumar[1] ,Dr.A.Amudha[2] ,M.Sivaram Krishnan[3] ,D.Kavitha[4], S.Sriragavi[5]

[1]Asst Prof. Department of EEE, Karpagam Academy of Higher Education, India
[2]Prof&Head. Department of EEE, Karpagam Academy of Higher Education, India
[3]Asst Prof. Department of EEE, Karpagam College of Engineering, India
[4]Asst Prof. Department of EIE, SNS College of Technology, India
[5]Asst Prof. Department of EEE, Sri Krishna College of Technology, India

----------**********----------

Abstract:

The energy storage is very important for electric vehicles. DC – DC converter is very important between a supply and the energy storage. When a Battery connected with a electric vehicle, a Bidirectional DC-DC converter is required. The power flow will be from both the side, i.e. Power flow from battery to Electric vehicle and vice versa. At once, source acting as load and load acting as source. So for protection purpose, Battery should be prevented when it act as load. In order to protect it, we are in need of a Isolated DC DC converter in between Electric Vehicle to battery. In this work, a DC DC converter is proposed for HPEV is done with fuel cell energy system.

Keywords: HPEV- Hybrid Plug-in Electric Vehicle, HEV- hybrid Electric Vehicle, Isolated DC-DC Converter.

----------**********----------

1. INTRODUCTION

A power control technique is expected to control the stream of energy and to keep up satisfactory stores of vitality in the capacity gadgets. Despite the fact that this is an additional many-sided quality that isn't found in ordinary vehicles, it enables the parts to cooperate in an ideal way to accomplish various outline targets, for example, high mileage and low discharges while keeping up or enhancing execution, for example, increasing speed, extend, commotion, noiseless activity, and so forth. The control procedure unites the segments as a framework and gives the knowledge that influences the parts to cooperate through mechanical and electrical control. Mechanical control incorporates grip control, throttle control, and different controls actuated mechanically by the driver from the auto's inside. Electrical control will undoubtedly be the prevailing methods for actualizing control methodologies.

This will be done through programming programs running on microchips that at that point initiate transfers and other electromechanical systems to play out the coveted capacities. These registering systems will have different information inputs estimated on the ebb and flow condition of the vehicle, (for example, segment temperatures, battery voltage, ebb and flow, and condition of charge) and in addition the standard wanted reaction asked for by the driver, (for example, braking and speeding up). This is all because of the expanded utilization of on-board PCs in present and future vehicles. One fundamental part for the control of energy is a DC-DC converter.

2. HYBRID PULG-IN ELECTRIC VEHICLE

With propelling battery innovations, it is inspiring conceivable to charge vehicle batteries at higher power levels. In this manner, at present, off-board quick charging arrangements are offered to facilitate the charging procedure. At these charging

stations, air conditioning voltage is changed over into dc off the vehicle, and the vehicle is dc coupled to the charging station. Right now, there are a few off-board quick charging-stations coupling models, for example, CHAdeMO and consolidated charging frameworks. The measures bolster up to a dc charging of 50 kW voltages going in the vicinity of 100 and 600 V with a specific end goal to meet distinctive dc battery voltage levels. Unidirectional or bidirectional topologies can be utilized as a part of off-board charging power electronic circuits. Front-end ac– dc converter topologies incorporate diode-connect rectifiers, three-stage dynamic buck/help rectifiers, Matrix rectifiers, and Vienna rectifiers. The unidirectional topologies just transmit control from an utility to a vehicle battery and work with right around a solidarity input control factor. The bidirectional power exchange by and large stands for the two-route exchange of dynamic power between the charger and the framework. Contrasted and bidirectional charging, unidirectional charging requires less equipment and easier specialized strategies, and it shields the battery from corruption. Be that as it may, sooner rather than later, bidirectional chargers may be additionally utilized as a part of PEVs once the benefits of vehicle to network (V2G) applications are illustrated. It is conceivable to join in excess of one activity mode in a charger by enabling the ability to stream bidirectional. The general term of sending dynamic power from a vehicle to a network is called V2G.

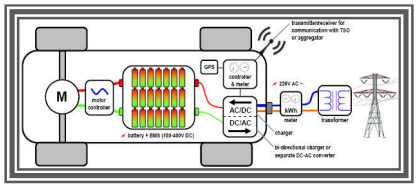

Figure 1 Schematic diagram of V2G technology

A. Types of vehicle charging equipment

Charging your PEV requires connecting to electric vehicle supply gear (EVSE). EVs must be charged routinely, and charging PHEVs frequently limits the measure of gas they devour. Regardless of whether freely accessible or introduced in your home, there are different sorts of charging framework. One essential variety is the manner by which rapidly they can charge a vehicle. EVSE is the hardware used to convey electrical vitality from a power source to a PEV. EVSE speaks with the PEV to guarantee that it supplies a suitable and safe stream of power. EVSE for PEVs is grouped into a few classes by the most extreme measure of energy gave to the battery. Two composes - Level 1 and Level 2. It gives rotating current (AC) power to the vehicle, with the vehicle's locally available gear changing over AC to the immediate current (DC) expected to charge the batteries. The other kind DC quick charging gives DC power specifically to the vehicle. Charging times run from under 30 minutes to 20 hours or more in light of the kind of EVSE, and also the sort of battery, how exhausted it is, and its vitality limit. EVs regularly have more battery limit than PHEVs, so charging a completely drained EV takes longer than charging a completely exhausted PHEV.

B Benefits of HPEV

PEVs can diminish your fuel costs drastically. Since they depend in entire or part on electric power, their efficiency is estimated uniquely in contrast to that of ordinary vehicles. You may see it expressed as miles per gallon of gas equivalent (mpge). Or then again it might be separated by kilowatt-hours (kWh) per mile or per 100 miles for EVs and the electric method of PHEVs, and miles per gallon (mpg) for the ICE method of PHEVs. Contingent upon how they are driven, the present EVs (or PHEVs in electric mode) can surpass 100 mpge. However mileage is expressed, you can look at data and figure out the noteworthy cost and discharges reserve funds of these advancements.

High productivity means low fuel cost. In electric mode, charging most PEVs costs just 3 to 6 pennies for every mile. Interestingly, fuelling a gas auto that has a mileage of 25 mpg costs around 1 pennies for every mile. In the event that you drive 12,000 miles for each year, you could spare $650 to $1,000 in yearly fuel costs by driving taking all things together electric mode as opposed to driving a customary gas auto. In the event that your utility offers bring down electric rates for PEV proprietors or for power amid off-top circumstances, you might have the capacity to diminish your power costs considerably further.

The old "service station" idea likewise will remain a choice—with an electric turn. Open quick

charging stations are ending up more broadly accessible, which can support a legitimately prepared PEV's battery in under 30 minutes. Obviously, if your vehicle is a PHEV, you can fuel with gas (or perhaps different energizes later on) when essential at any service station. PEVs can help keep your town and your reality clean. There are two general classifications of vehicle outflows: direct and life cycle. Coordinate outflows are transmitted through the tailpipe, through dissipation from the fuel framework, and amid the fuelling procedure. Coordinate emanations incorporate exhaust cloud shaping toxins, for example, nitrogen oxides, different contaminations hurtful to human wellbeing and ozone harming substances (GHGs), basically carbon dioxide.

III. FUEL CELL

The improvements prompting an operational energy component can be followed back to the mid 1801's with Sir William Grove perceived as the pioneer in 1839. All through the rest of the century, researchers endeavoured to create power modules utilizing different fills and electrolytes. Additionally work in the principal half of the twentieth century filled in as the establishment for frameworks in the long run utilized as a part of the Gemini and Apollo space flights. Proton trade layer power modules were first utilized by NASA in the 1960's as a feature of the Gemini space program, and were utilized on seven missions. Those energy units utilized unadulterated oxygen and hydrogen as the reactant gases and were little scale, costly and not financially practical. NASA's between est pushed facilitate advancement, as did the vitality emergency in 1973. From that point forward, power module inquire about has proceeded with unabated and energy units have been utilized effectively in a wide assortment of utilizations.

In an energy unit, the fuel and the oxidant gases themselves contain the anode and cathode separately. Along these lines, the physical structure of an energy component is one where the gases are guided through stream channels to either side of the electrolyte. The electrolyte is the recognizing highlight between various kinds of power modules. Distinctive electrolytes direct extraordinary particular particles. Electrolytes can be fluid or strong; some work at high temperature, and some at low temperature. Low-temperature energy units have a tendency to require a honourable metal impetus, ordinarily platinum, to support the anode responses while high-temperature power modules don't. Most power modules appropriate for car applications utilize a low temperature strong electrolyte that behaviours hydrogen particles as appeared in figure 2.

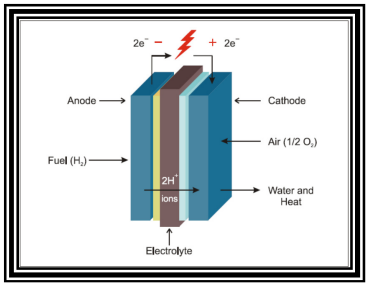

Figure : 2 Fuel cell operation

IV. ISOLATING CONVERTER

A. Flyback converter

The fundamental circuit for a fly back write converter is appeared in figure 3 In numerous ways it works like the buck-support converter, yet utilizing a transformer to store the vitality rather than a solitary inductor. When MOSFET Q1 is exchanged on, current streams from the source through essential winding L1 and vitality is put away in the transformer's attractive field. At that point when Q1 is killed, the transformer tries to keep up the present course through L1 by all of a sudden switching the voltage crosswise over it creating a fly back beat of back-EMF.Q1 is had a high breakdown voltage, though, so present just can.t be kept up in the essential circuit. But since of transformer activity a much higher fly back beat is actuated in optional twisting L2.And here diode D1 can lead amid the pulse, delivering current to the heap and reviving channel capacitor C1 (which gives stack current between pulses).So the fly back converter again has two unmistakable stages in its exchanging cycle. Amid the principal stage Q1 behaviours and vitality is put away in the transformer core via the essential winding L1. At that point in the second stage when Q1 is killed, the put away vitality is moved into the heap and C1 through auxiliary winding L2.

The proportion amongst yield and info voltage of a flyback converter isn't just a question of the turns proportion amongst L2 and L1, in light of the fact that the back-EMF voltage in the two windings is controlled by the measure of vitality put away in the attractive field, and consequently relies upon the winding inductance, the period of time that Q1 is turned on, etc. However the proportion amongst L2 and L1 surely assumes a vital part, and most flyback converters have a genuinely high swings proportion to permit a high voltage advance up ratio. Because of the way the flyback converter works, the attractive motion in its transformer centre never switches in extremity. Subsequently the centre should be genuinely vast for a given power level, to maintain a strategic distance from attractive immersion. In light of this flyback converters have a tendency to be utilized for moderately low power applications like creating high voltages for protection analyser's, Geiger counter tubes, cathode beam tube and comparative gadgets drawing generally low current.

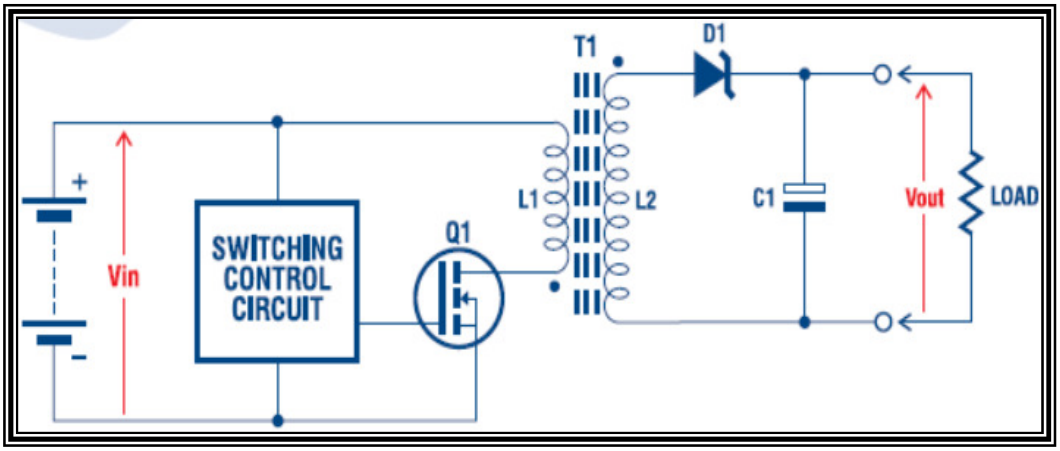

Figure 3 Flyback converter

V. PROPOSED SYSTEM

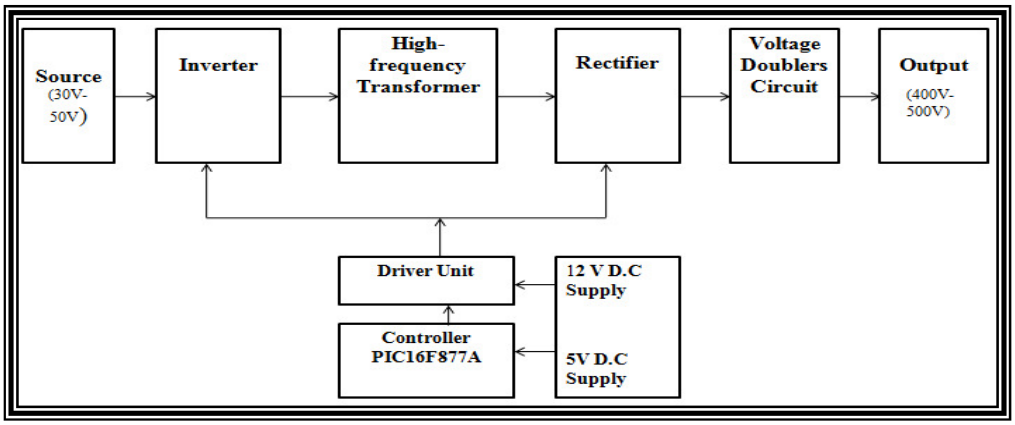

Figure 4 Block diagram of proposed system

Figure 4 shows the block diagram of hybrid plug-in electric vehicle charging station with bidirectional isolated DC-DC converter. This charging system is fed by fuel cell energy system which is one of the renewable energy sources

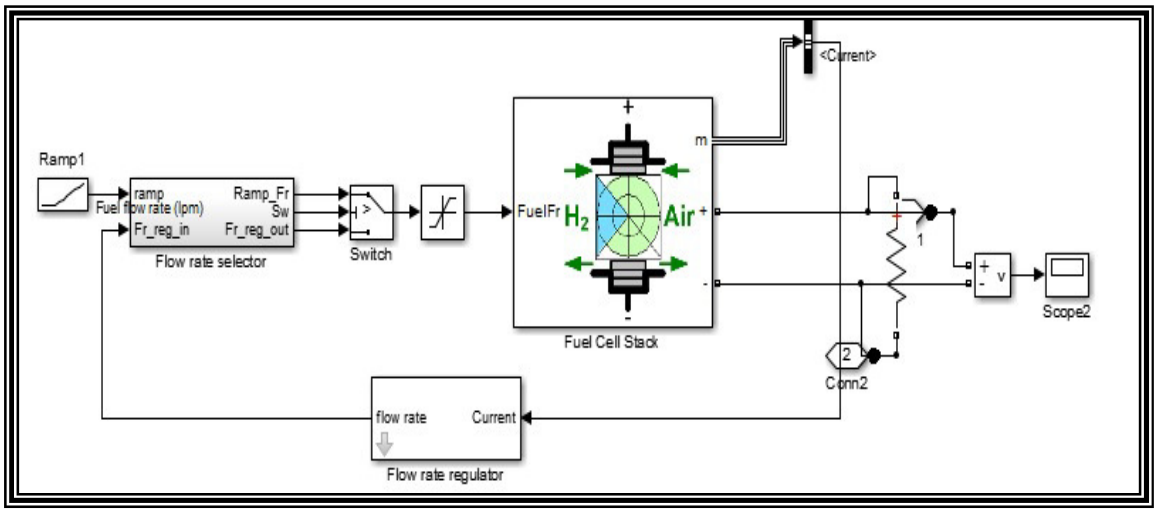

Figure 5 Simulation diagram of fuel cell

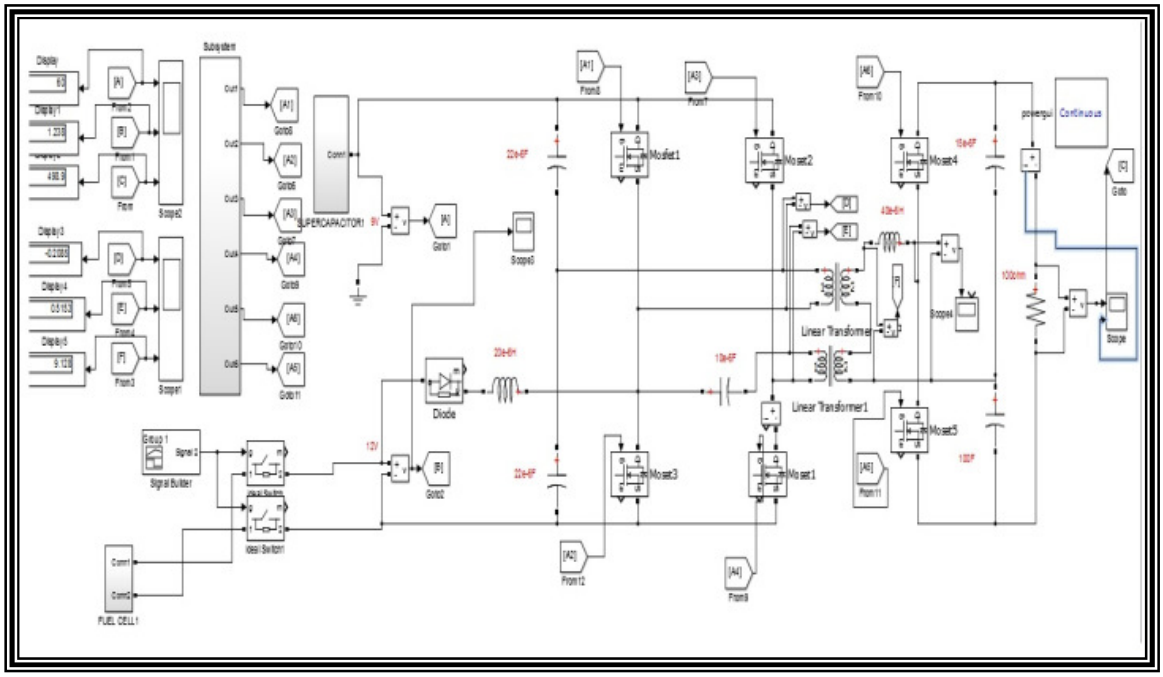

Figure 6 Overall system simulations

VI. RESULTS

The behaviour of the complete system of the proposed Hybrid plug-in electric vehicle charging station with bidirectional DC-DC converter which is charged by the fuel cell energy system is discussed with the simulation results. The direct output voltage of the fuel cell is shown in figure 4 which is 20V DC. The output of the fuel cell after bidirectional isolated DC-DC converter is shown in figure 9 which is nearly 600V DC.

REFERENCES

1. D. Kavitha1 , M. Siva Ramkumar, M. Sivaram Krishnan, S. Kalaiarasi "An Advanced Power Theft Identifier using LabVIEW" International Journal of

Management, Technology And Engineering , 8(X), pp 1153-1165

2. T. Kalimuthu, M. Siva Ramkumar, Dr.A. Amudha, Dr.K. Balachander and M. Sivaram Krishnan "A High Gain Input-Parallel Output-Series DC/DC Converter with Dual Coupled-Inductors" Journal of Advanced Research in Dynamical and Control Systems, (12), pp 818-824

3. S. Tamil Selvan, M. Siva Ramkumar, Dr.A. Amudha, Dr.K. Balachander and D. Kavitha "A DC-DC Converter in Hybrid Symmetrical Voltage Multiplier Concept" Journal of Advanced Research in Dynamical and Control Systems, (12), pp. 825-830

4. V. Akiladevi, Dr.A. Amudha, Dr.K. Balachander, M. Siva Ramkumar and S. Divyapriya "Integrated DC/DC Parallel Maximum Power Point Tracking based Photovoltaic System Architecture for Common DC Bus" Journal of Advanced Research in Dynamical and Control Systems, (12), pp. 831-843 .

5. S. Ananthanarayanan, Dr.A. Amudha, Dr.K. Balachander, M. Siva Ramkumar and D. Kavitha, "Design and Analysis of Power Quality Improvement in Distribution Side Using PCC Technique with Fuzzy Logic Control" Journal of Advanced Research in Dynamical and Control Systems, (12), pp 844-852 .

6. D. Babu, Dr.A. Amudha, Dr.K. Balachander, Dr.G. Emayavaramban and M. Siva Ramkumar "Power Grid Connected Semi-Z Source Inverter Supplied by Photovoltaic and Wind System with a New Modulation Strategy" Journal of Advanced Research in Dynamical and Control Systems, (12), pp 853-866 .

7. C. Chinnusamy, Dr.G. Emayavaramban, Dr.A. Amudha, Dr.K. Balacahnder and M. Siva Ramkumar, "Transient Stability Improvement in Power System with SMES and Battery Energy Storage System" Journal of Advanced Research in Dynamical and Control Systems, (12), pp 900-914 .

8. K. Kaleeswari, Dr.K. Balachander, Dr.A. Amudha, M. Siva Ramkumar and D. Kavitha, "Analysis and Parallel Operation of Novel Bidirectional DC-DC Converter for DC Micro Grid" Journal of Advanced Research in Dynamical and Control Systems, (12), pp 928-940 .

9. T. Kalimuthu, Dr.K. Balachander, Dr.A. Amudha, Dr.G. Emayavaramban and M. Siva Ramkumar, "An Efficient High Step Up Converter for Automobile Applications Using Fuzzy Logic Control Technique" Journal of Advanced Research in Dynamical and Control Systems, (12), pp 941-950 .

10. C. Karunamoorthy, Dr.A. Amudha, Dr.K. Balachander and M. Siva Ramkumar, "A Photovoltaic Generation System Based on Hybrid Multilevel Inverter in Order to Reduce Switching for DC Micro Grids" Journal of Advanced Research in Dynamical and Control Systems, (12), pp 951-965 .

11. M. Jayaprakash, D. Kavitha, M. Siva Ramkumar, Dr.K. Balacahnder and M. Sivaram Krishnan, "Achieving Efficient and Secure Data Acquisition for Cloud-Supported Internet of Things in Grid Connected Solar, Wind and Battery Systems" Journal of Advanced Research in Dynamical and Control Systems, (12), pp 966-981 .

12. M. Mohammed Shaheeth, D. Kavitha, Dr.A. Amudha, M. Siva Ramkumar, Dr.K. Balachander and Dr.G. Emayavaramban, "Grid Connected Wind Energy Conversion System with Unified Power Quality Conditioner (UPQC) by Fuzzy Logic" Journal of Advanced Research in Dynamical and Control Systems, (12), pp 982-996 .

13. G. Murugaiyan, D. Kavitha, Dr.A. Amudha, M. Siva Ramkumar and Dr.G.

Emayavaramban, "Hybrid Electric Vehicle Charging Use of Bidirectional Isolated DC-DC Converter" Journal of Advanced Research in Dynamical and Control Systems, (12), pp 997-1008 .

14. S. Nandhini, D. Kavitha, S. Kalaiarasi, Dr.A. Amudha and M. Siva Ramkumar "Intelligent Power Tracking Algorithm Using ANFIS and ZETA Converter" Journal of Advanced Research in Dynamical and Control Systems, 10(5), pp 1212-1221

15. S. Senthil Kumar, D. Kavitha, Dr.A. Amudha, Dr.G. Emayavaramban and M. Siva Ramkumar "Analysis of New Novelty Multilevel Inverter Configuration with Boost Converters for a Photovoltaic System with MPPT" Journal of Advanced Research in Dynamical and Control Systems, 10(5), pp 1232-1244

16. R. Shobana, Dr.K. Balachander, Dr.A. Amudha, Dr.G. Emayavaramban and M. Siva Ramkumar "PV and Fuel Cell based Dynamic Voltage Restorer for LVRT Improvement of DFIGWTS" Journal of Advanced Research in Dynamical and Control Systems, 10(5), pp 1245-1255

17. D. Kavitha, M. Siranjeevi, Dr.K. Balachander, M. Siva Ramkumar and M. Sivaram Krishnan "Non Isolated Interleaved Cuk Converter for High Voltage Gain Applications" Journal of Advanced Research in Dynamical and Control Systems, 10(5), pp 1256-1261

18. P. Srinivasan, Dr.K. Balachander, Dr.A. Amudha, Dr.G. Emayavaramban and M. Siva Ramkumar "A Fuzzy Logic Approach to Microgrid Demand Response in both Offline and Online Mode" Journal of Advanced Research in Dynamical and Control Systems, 10(5), pp 1262-1275

19. K. Suresh Kumar, Dr.K. Balachander, Dr.A. Amudha, M. Siva Ramkumar and D. Kavitha "Multi Converter Unified Power Quality Conditioning (MC-UPQC) for various Loads with ANN Approach to Two Source Concept" Journal of Advanced Research in Dynamical and Control Systems, 10(5), pp 1276-1288

20. R. Veluchamy, Dr.K. Balachander, Dr.A. Amudha, M. Siva Ramkumar and Dr.G. Emayavaramban , "Analysis and Energy Efficiency of Small-Scale Wind Energy Conversion System Using Adaptive Network based Fuzzy Interference System (ANFIS) of Maximum Power Point Tracking Method" Journal of Advanced Research in Dynamical and Control Systems, 10(5), pp 1289-1301

21. S. Senthil Kumar, M. Siva Ramkumar, Dr.A. Amudha, Dr.K. Balachander Dr.G. Emayavaramban "Cascade Cockcroft-Walton Voltage Multiplier Applied to Transformer less High Step-Up DC-DC Converter" Journal of Advanced Research in Dynamical and Control Systems, 10(5), pp 1082-1088

22. P. Chitra, M.Siva Ramkumar,Dr.A.Amudha,Dr.K.Balachander, Dr.G. Emayavaramban "High Step-Up DC-DC Converter based on Three-Winding Coupled Inductor" Journal of Advanced Research in Dynamical and Control Systems, 10(5), pp 1089-1094

23. S.Vivekanandan, M. Siva Ramkumar, Dr.A.Amudha, M. Sivaram Krishan, D. Kavitha "Design and Implementation of Series Z-Source Matrix Converters" Journal of Advanced Research in Dynamical and Control Systems, 10(5) , pp 1095-1102

24. A. Thirugnanaselvi, M. Siva Ramkumar, Dr.A. Amudha, M. Sivaram Krishan,Dr.K. Balachander "DTC-SVM Management of Induction Machine Fed by 3 Level NPC Matrix Convertor" Journal of Advanced Research in Dynamical and Control Systems, 10(5) , pp 1103-1108

25. V. Jesudoss, Dr.K. Balachander, Dr.A. Amudha, M. Siva Ramkumar, S. Divyapriya "Reactive Power Compensation in a Three

Phase Four Wire Distribution System Using DSTSTCOM with Fuzzy Logic Controller" Journal of Advanced Research in Dynamical and Control Systems, 10(5) , pp 1109-1127

26. P. Sivakumar, M. Siva Ramkumar, Dr.A. Amudha, Dr. K. Balachander, D. Kavitha "A Single Stage Three Phase Inverter based on Cuk Converter for PV Application" Journal of Advanced Research in Dynamical and Control Systems, 10(8) , pp 879-885

27. M.Sivaram Krishnan, Dr.A.Amudha, M.Siva Ramkumar, S.Sriragavi "Active Neutral Point Clamped 3 Level Matrix Converter based on Direct Torque Controlled-Space Vector Modulation for Induction Machine" International Journal of Electronics, Electrical and Computational System, 7(4) , pp 612-620

28. M.Sivaram Krishnan, Dr.A.Amudha, M.Siva Ramkumar, S.Sriragavi "Series Z-Source Matrix Converters Simulation and Implementation Techniques" International Journal of Electronics, Electrical and Computational System, 7(4), pp 621-630

29. M.Sivaram Krishnan, Dr.A.Amudha, M.Siva Ramkumar" execution examination of a three phase ac to three phase ac matrix converter using distinctive transporter BASED EXCHANGING ALGORITHMS" International Journal of Pure and Applied Mathematics, 118(11), pp 609-617

30. M.Siva Ramkumar, Dr.A.Amudha, M.Sivaram Krishnan, S.Sriragavi . "MER Based Bi-Directional Three Winding Dc- Dc Converters with ZVS" International Journal of Scientific Research and Review 7(1),pp 9-17.

31. Dr.A Amudha, K Balachander, M Siva Ramkumar . "power conservation and control in base transceiver station towers using scada" International Journal of Scientific Research and Review 6 (12) , pp 149-156.

32. S.Sriragavi, M.Sivaram Krishnan, M.Siva Ramkumar "static compensator in power quality improvement for lvts" in International Journal of Scientific Research and Review 6(11) ,pp 51-60

33. Dr.A.Amudha , M.Siva Ramkumar , M.,Sivaram Krishnan ""perturb and observe based photovoltaic power generation system for off-grid using sepic converter" International Journal of Pure and Applied Mathematics (IJPAM) Volume no 114 Issue no 7 pp 619-627

34. M.Siva Ramkumar, M.Sivaram Krishnan, Dr.A.Amudha "resonant power converter using ga for pv applications" International Journal Of Electronics, Electrical And Computational System (IJEECS) Volume no 6 Issue no 9 pp 239-245.

35. M.Sivaram Krishnan, S.Sriragavi , M.Siva Ramkumar, "impedance source inverter and permanent magnet synchronous generator for variable speed wind turbine " International Journal of Computer & Mathematical Sciences (IJCMS) 6 (9) pp 98-105.

36. M.Siva Ramkumar "unmanned automated railway level crossing system using zigbee" in International Journal of Electronics Engineering Research (IJEER) 9 (9) pp 1361-1371.

37. M.Subramanian,M.Siva Ramkumar, Dr.A.Amudha,K.Balachander and D.Kavitha " power quality improvement in low voltage transmission system using static compensator" in International Journal of Control Theory and Applications 10 (38) pp 247-261

38. V.Chandra Prabha , Dr.A.Amudha ,K.Balachander and M.Siva Ramkumar " mppt algorithm for grid integration of variable speed wind energy conversion

system" in International Journal of Control Theory and Applications 10 (38) pp 237-246

39. R.Yuvaraj,K.Balachander, Dr.A.Amudha , S.Kuppuamy and M.Siva Ramkumar " modified interleaved digital power factor correction based on the sliding mode approach" in International Journal of Control Theory and Applications 10 (38) pp 225-235

40. R.Ravichandran ,K.Balachander, Dr.A.Amudha, M.Siva Ramkumar and S.Kuppusamy " estimation of electrical parameter using fuzzy logic controller based induction motor" in International Journal of Control Theory and Applications 10 (38) pp 205-212

41. K.R.Jeyakrishna, Dr.A.Amudha,K.Balachander and M.Siva Ramkumar " electric vehicle battery charging station using dual converter control" in International Journal of Control Theory and Applications 10 (38) pp 195-203

42. M.R.Latha,S.Kuppusamy,Dr.A.Amudha,K.Balachander and M.Siva Ramkumar " an efficient single stage converter based pv-dvr for improving voltage quality" in International Journal of Control Theory and Applications 10 (38) pp 177-193

43. N.Sivakumar, D.Kavitha, M.Siva Ramkumar, V.Bhavithira and S.Kalaiarasi "a single stage high gain converter for gird interconnected renewable application using perturb and observe" in International Journal of Control Theory and Applications 10 (38) 161-175

44. M. Sivaram Krishnan M. Siva Ramkumar and A. Amudha "frequency deviation control in hybrid renewable energy system using fc-uc " in International Journal of Control Theory and Applications 10 (2) pp 333-344

45. M Siva RamKumar, Dr.A Amudha, R.Rajeev "optimization for a novel single switch resonant power converter using ga to improve mppt efficiency of pv applications" in International Journal of Applied Engineering Research (IJAER) 11(9) pp 6485-6488 .

46. M.Sivaram Krishnan ,M.Siva Ramkumar and M.Sownthara "power management of hybrid renewable energy system by frequency deviation control" in 'International Journal of Innovative Research in Science, Engineering and Technology' on 3 (3) pp 763-769 .

47. R.Sudhakar and M.Siva Ramkumar "boosting with sepic" in 'International Journal of Engineering and Science' 3 (4) pp 14-19 .

48. M.Sownthara and M.Siva Ramkumar "wireless communication module to replace resolver cable in welding robot" in International Journal of Advanced Information Science and Technology on 23(23) pp 230-235

49. M.Siva Ramkumar and M.Sivaram Krishnan "hybrid solar-wind energy system" in 'International Journal of Advance Research in Computer Science and Management Studies' on volume 2, lssue 2, FEB'14.

50. M.Sivaram Krishnan and M.Siva Ramkumar "power management of a hybrid solar-wind energy system" in 'International Journal of Engineering Research & Technology' 2 (1) pp 1988-1992.

51. M.Sivaram Krishnan and M.Siva Ramkumar "power quality analysis in hybrid energy generation system" in 'International Journal of Advance Research in Computer Science and Management Studies' 2 (1) pp 188-193

