RESEARCH ARTICLE OPEN ACCESS

AUTOMATIC MANGLING AND RUFFLE MACHINE FOR GARMENT INDUSTRY

Mr. Mohan Raj C.[1], Mr. Anudhar M S. [2], Ms. Jaishri B S. [3], Mr. Venkatraman S. [4], Mr. Veera Dinesh A. [5]
[1] Assistant Professor
[2 to 5] UG students
Department of Electrical and Electronics Engineering, Sri Eshwar College of Engineering, Coimbatore – 641202.
E-mail: mohanraj.c@sece.ac.in , anudhar.m.s2016eee@sece.ac.in , jaishri.b.s2016eee@sece.ac.in , venkatraman.s2016eee@sece.ac.in , veeradinesh.a2016eee@sece.ac.in

---

ABSTRACT:

This paper brings in automation on to a sector in the textile industry and this is "Automatic mangling and ruffle machine" with quality control. To solve this we are to introduce a continuous process through IOT with PLC. This machine is programmed to iron, fold and stack the clothes. It will operate only in an automated process where the job of the operator is only to monitor the machine for proper quality control. We chiefly concern here with the ironing and folding of shirts and T-shirts. In a very short span of time, the overall production rate of the goods can be increased with minimal man power. The whole separate process of the garment industries are integrated to operate in a single time. This also provides simple controlling and the time spent over single piece of cloth being reduced.

KEYWORDS —**automatic ironing, quick stacking, moderate cloth setting, pressured folding, and compact ironing.**

I. INTRODUCTION

The world has completely been automated. The machines are completely been occupied by us and they have started ruling the World. Mostly, everywhere imported machines are used. Though these machines are less cost are more accurate there are some demerits too. Thinking regarding this concern is where we came with the thought of designing the automatic mangling and ruffling with quality control.

Thus to solve this we are to introduce a continuous process through IOT and PLC. The main disadvantage faced by the operators is troubleshooting its fault during malfunctioning [1][5][8]. During its malfunction, the one who has manufactured is been expected [1]. The Original Manufacturer is been demanded, thus correction by suppliers cannot be done as it is a tedious task.

II. PROBLEM STATEMENT

The textile industry hasn't witnessed the growth in the field of technology aiding the industry to the most optimum availability of the mechanism in towards the World, that mainly being overall automation in the manufacturing division of the textile industry. Our main aim is bringing automation in the Packing sector in the textile manufacturing industry [2][4][8]. In addition to the automatic folding mechanism of the cloth, we also intend to introduce more automation. This will ensure the full automation in textile industry which it has been lacking [3]. The system will be designed with the present available materials and components as to bring simplicity and more importantly cost effectiveness in the system. The implementation of the entire assembly can be easily incorporated with increased production, reduction of high manpower and time without any high volume changes.

III. SURVEY

Small survey was done in nearly four textile industries in and around our city. When we went on examining every section of those industries, we found individual people standing with iron box to iron the T- shirts, and more number of boilers were used for passing steam, separate persons for folding the clothes, and again for packing them on to covers [2]. This analysis helped us to come out with designing a single machine for doing the entire three tasks in a continuous process.

IV. METHODOLOGY

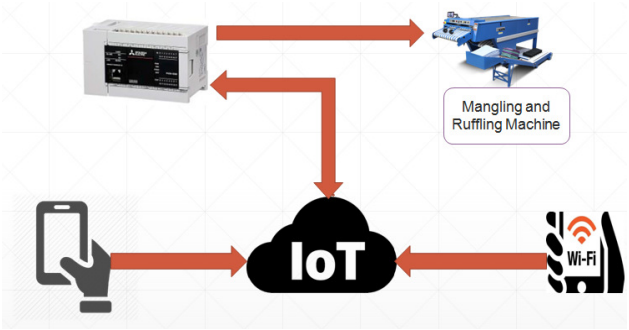

Fig 1: Block Diagram

The block diagram shows the overall working of the system .The required program for PLC and HMI are created through software and are fed to the devices using Ethernet cables. Then the PLC and the machine are connected, with this the process is made continuous. They are being interfaced with IOT to mobile phones

where the current running status and the required production analysis can be done to take the next required action.

V. HARDWARE COMPONENTS

In our project, automatic mangling and ruffle machine, we have developed a mechanical setup for continuous process. The following are the hardware components used,

1. PLC
2. HMI
3. VFD
4. Proximity Sensor
5. Relay
6. Circuit Breaker
7. Blower Motor
8. PMDC motor

1) *PROGRAMMABLE LOGIC CONTROLLER:*

A Programmable Logic Controller or PLC is a improvised computer used for industrial automation. These controllers can automate a definite process, machine function, or even an entire manufacture line.

The PLC receives information from allied sensors or input devices, process the data, and activates output based on pre-programmed parameters. Liable on the inputs and outputs, a PLC can check and record execution-time data such as appliance output or functioning temperature, routinely start and stop processes, cause alarms if a machine failure and more. PLC's having robust control solution, adjustable to almost any application.

Fig 2: Programmable Logic Controller (PLC)

a) ADVANCED PLC FEATURES

In today's world of the Industrial Internet of Things, and Industry 4.0 programmable controllers are called upon to communicate data via web browser, connect to databases via SQL and even to Cloud data.

b) HOW IS PLC PROGRAMMED?

A PLC program is usually written on a computer and then is downloaded on to the controller.

Most PLC programming software offers encoding in ladder logic, or "C". Ladder logic is the traditional programming language. It mimics circuit illustrations with "rungs" of logic recited left to right. Each rung signifies a specific deed controlled by the PLC, starting with an input or series of inputs (contacts) the outcome in an output (coil). Because of its pictorial nature, Ladder logic can be easier to implement than many other encoding languages. "C" programming is a more recent invention.

The PLC used for this machine is 24V PLC and it has 16 input and output pins each. It also has separate pins for Analog to Digital conversion and Servo Motor setup. The proximity sensor was connected to the input terminals. The proximity sensors, two PMDC motor, an induction motor, tower lamp, and boiler are controlled by this PLC.

Some PLC manufacturers supply control programming software. The program is created using the given software and is fed to the PLC and is linked with HMI, and the machine through an Ethernet cable.

The induction motor is used for controlling the movement of ironing plate and the respective motion is detected with the help of proximity sensor [4]. The induction motor is driven with the help of VFD. The Boiler is connected to a separate DC supply and is connected to the ironing pad for passing the stream [3][5][8]. The Boiler is maintained to produce steam with a pressure of 4 bars.

If a fault occurs during the process, it is indicated by colour change in the tower lamp, this is connected to a buzzer. Hence knowing this, the machine can be stopped with an emergency stop button provided and then the machine can be checked for the fault produced [2][6][8].

2) *HMI*

A Human Machine Interface is a interface or Dashboard that connects a person to a machine, system or device. While it can be technically applied to any screen that allows a user to interact with a device [8], HMI is most commonly used in the context of an Industrial process.

In Industrial settings, HMI can be used to:

- Visually display data
- Track production time, trends and tags
- Oversee the work
- Monitor machine inputs and output

The HMI screen is programmed using separate software. Once the design is done using the software it is checked and is fed on to the HMI device. This helps in setting all the components in a visual form and also to view its working. A basic HMI device will look as shown in the figure 3,

Fig 3: Human Machine Interface (HMI)

A Human Machine Interface (HMI) implies; a graphical interface that consents humans and machinery to interact. The below table 1 shows the specifications of the HMI display screen,

Item	Specifications
Display	8.4 inch and 10.4 inch size, 65536 colours TFT - LCD display
User memory	Memory for storage (ROM): 9MB Memory for operation (RAM): 9MB
Standard Interface	Ethernet, RS-232, RS-422/485 USB host (USB-A) 1ch (Full-Speed 12Mbps) USB device (USB Mini-B) 1ch (Full-Speed 12Mbps)

Table 1: HMI specification

We created eight HMI screens for selecting the T-shirt type, temperature setting, the fabric type , the input and output operating pins, ON and OFF control screen etc[1][2][4][6],. Thus this helps in setting the process directly and does not require the program to be changed after every process. The PLC and the HMI are linked using an Ethernet port.

3) VFD:

Variable Frequency Drive (VFD) is user for speed control of electric motors. The VFDs are commonly applied to air supervisors, pumps, coolers and tower fans.

The basic power and control circuit schematic diagram of VFD is shown in Figure 4,

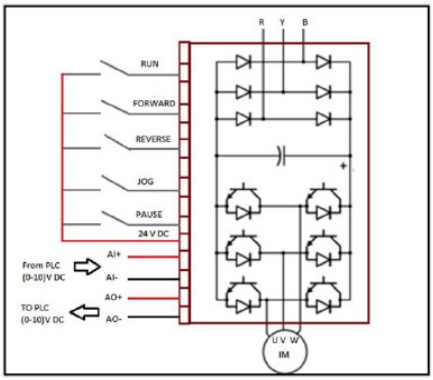

Fig 4: VFD Schematic diagram

The speed of Permanent magnet can be varied by armature voltage control etc. One of the popular methods of speed control is V/F control. Thus with this basic V/F control method, we have used this VFD for controlling motion of the ironing plates [6]. The basic VFD used for this machine is of and is as shown in the figure 5,

Fig 5: Variable Frequency Drive

This VFD as shown in the figure was used to control the induction motor which is been used for the movement of the ironing place. With respect to the supply voltage, a frequency would be produced and this makes the motor to rotate in a particular with. This speed helps in moving the ironing plate from top to bottom [5]. The steam would be passed for specific time. Once the ironing is done, the ironing plate moves back again to its original position.

4) PROXIMITY SENSOR:

A proximity sensor is a sensor able to sense the adjacent objects. It often emits an electromagnetic field or beam of electromagnetic radiation, and looks for changes in the field or return signal. Different proximity sensors targets demand different sensor. For example, a capacitive proximity sensor or photo electric sensor might be suitable for a plastic target; an inductive proximity sensor always requires a metal target.

In this machine nearly ten proximity sensors are used to detect the various metal plate levels and with this result [5][6][7][8], the next process command gets executed automatically.

The sensors were placed in different positions, two sensors for detecting the ironing plate and six sensors for detecting the motion of the folding plates and thus executing the process continuously.

International Electro technical Commission (IEC) 60947-5-2 expresses the technical facts of proximity sensors. A proximity sensor accustomed to a very short array is so often used as a touch switch.

An inductive sensor is a device that uses the principle as stated above. Thus this effect is used to detect metallic objects that interact with the magnetic field. A simple proximity sensor will be as shown in the figure 6,

Fig 6 : Induction Proximity Sensor

5) RELAY:

A relay is an electromagnetic switch functioned by a reasonably minor electric current. As the name suggests, many sensors are incredibly sensitive pieces of electronic equipment and produce only small electric current [2][3][5][6]. But frequently we need them to drive bigger parts of machine that use bigger currents.

Relays channel the gap, making it probable for small currents to trigger larger ones. It means relays can toil both as switches (turning on and off) and amplifiers.

The table 2 shown below, gives the specification of the relay used for this machine,

Contact arrangement	5 form C, OP0 - OP43 form A, OP5 - OP7
Contact material	Gold overlay silver
CONTACT RATING	
Rated voltage	230VAC/28VDC
Maximum voltage	440VAC/220VDC
Maximum Continues current	230VAC/24VDC
Insulation resistance	470 ohm min
Contact resistance	100 milliohms max
Operate time at nominal voltage	20 milliseconds
Release time at nominal voltage	10 milliseconds max
Weight	18 GMS

Table 2: 8 channel relay specification

The relays used in this machine are functioned to work automatically, and hence this does not require manual intervention during mal functioning. The basic relay used would be as shown below figure 7,

Fig 7: 8 Channel Relay

We used three, 8 channel relays each of 24V coil for controlling the overall operation. All they devices were controlled using these relays and are connected to the PLC. The input and output pins of all the other devices like motor, sensor, circuit breaker, programming devices etc., are given to this relay through PLC.

6) MINIATURE CIRCUIT BREAKER:

A Miniature Circuit Breaker (MCB) normally switches off an electrical circuit during an infrequent circumstance of the system.

Its basic utility is to sense a fault condition and intrude current flow. Unlike a fuse, which works once and then it must be exchanged with a new one, but a circuit breaker can be reset to continue the usual operation.

Fig 8: Miniature Circuit Breaker

7) BLOWER MOTOR:

A Blower motor is an electric motor that are attached to fans and used to move air throughout a system. It consists of a DC motor, a fan relay, a blower motor resistor to control its operation. When voltage is applied to the electrical motor, it twists. In turn, that causes the fan to spin [7]. Since the motor assemblage is anchored in place, usually inside a box, the fan is able to move quite large volumes of air at high rates.

In this machine this motor is set up in the lower end. This sucks in some of the hot steam coming from the ironing plate and helps in steaming the other end of the cloth. This also helps in holding the cloth stiffly [3][4][6]. The hot steam is also evenly surrounded on to all the places on the other side of the cloth. A basic blower motor would look as shown in the below figure 9,

Fig 9: Blower Motor

Once the ironing is done by passing the steam, the blower on the other hand leaves the cloth and is folded. A last folding plate is structured to be in the form of a slider and this slides into a cover as a result the cloth gets folded. A blower motor of 10W is used for opening the covers for packing the cloth.

8) PMDC MOTOR:

A DC motor whose poles are made up of permanent magnet is known as Permanent Magnet DC (PMDC) motor. The magnets are radially magnetized and are mounted on the inner periphery of the cylindrical steel stator [1][5][8]. The stator serves as a return pathway for the magnetic flux. The rotor contains a DC armature, with commutation segments and brushes.

The permanent magnet DC motor generally operates on 6V, 12V, or 24V DC supply obtained from batteries or rectifiers. The interaction between the axial current carrying rotor conductors and the magnetic flux produced by the permanent magnet results in generation of torque. This torque is responsible for driving the motor.

The PMDC motors are mainly used in automobiles to operate windshield wipers and washers, to raise the lower windows, to drive blowers for heaters and air conditioners etc. This motor is used here to help the movement of the ironing and the folding pads [8]. The motor looks as shown in the below figure 10,

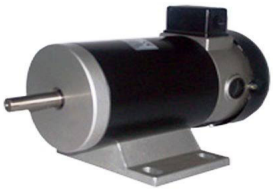

Fig 10: Permanent Magnet DC Motor

The PMDC motor was fixed on two sides of the machine and is used for controlling four folding pads with the help of proximity sensors[2][4][8]. Each PMDC motor controlled three proximity sensors and with the help of this the motor rotates and moves the folding pad in desired direction. Thus the cloth gets folded in a designed manner.

VI. DESIGN AND IMPLEMENTATION

The mechanical setup along with the function of the process are shown in the below figures,

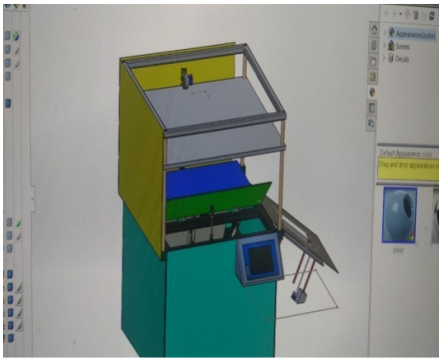

Fig 11: Machine front view designed using Solid works software

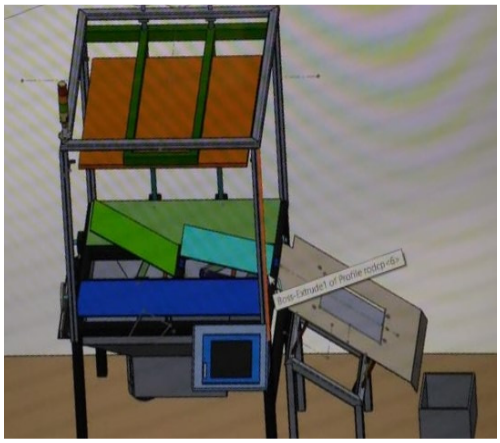

Fig 12: Machine full view done using Solid works software

Fig 13: Machine during fabrication

Fig 14: Full machine after fabrication

Fig 15: Pannel board

Fig 16: HMI screen images

Fig 17: PLC program images

VII. CONCLUSION

The following results are been achieved through this work,

1. On doing normal work, the number of shirts ironed per minute were found to be approximately about one but using our machine we are efficient in achieving nearly three T-shirts were ironed.
2. This shows a production growth as twice efficient as the first one.
3. The automation technology has also helped in reducing the working labour and the wages given to them.

VIII.REFERENCE

[1] S. Azhandeh, S. Rezai Manesh, M. A. Hassanpour, A. A. Safavi, "Fuzzy Control of a real plant via PLC". The 1st conference on Control, Automation, and Instrumentation, Tehran, Iran, 2010.

[2] Bansari Shetye, Pooja randive, Snehal Shedbale (2016) "Automatic T-shirt Folding Machine", International Research Journal of Engineering and Technology, Bolume 06 Issue:04, e-ISSN:2395-0056.

[3] Bhargav Ingale, Kiran Farande, Manish Veer, Akshav Thorat, Vishal Meshram (2018), "Automatic Saree Ironing Machine", IJIERT, ISSN: 2394-3696.

[4] M. Casini, D. Prattichizzo, and A. Vicino, "The Automatic Control Tele lab" IEEE Control Systems Magazine, pp.36-44, 2004.

[5] C. Lehnert, I. Sa, C. McCool, B. Upcroft, T. Perez, "Sweet Pepper Pose Detection and Grasping for Automated Crop Harvesting" in ICRA, pp.2428-2434,2016.

[6] Mukesh P Mahajan, Tejal Binnar, Srishti Prasad, Monika Tambe (2017), " Automatic T- shirt Folding Machine", International Journal of Computer Application, Volume 162-No 10, 097-8887.

[7] A.A. Safavi, "Programmable Controllers: Operation and Application", Nas Pub, Tehran, Iran, 2006.

[8] Suraj Shah, Utkarsha Mahajan (2015) "Automatic Cloth Folding and Colour based sorting mechanism", IJTRE, Volume 2 Issue: 7

