RESEARCH ARTICLE OPEN ACCESS

Conceiving and Designing of An Electric – Solar Vehicle

Aditya Saxena*, Gaurabh Pratim Sarma**, Rahul Kumar***,

*(Department of Mechanical Engineering, Chandigarh University, Gharuan, Email: adityavineetsaxena@gmail.com)

**(Department of Mechanical Engineering, Chandigarh University, Gharuan, Email: gaurabhsarma@gmail.com)

***(Department of Mechanical Engineering, Chandigarh University, Gharuan, Email: rahulchandra2203@gmail.com)

----------**********----------

Abstract:

Any piece of hardware in absence of electricity is an idle bunch of components. Highly distinguished with these reliable upon the non-inexhaustible strength sources. It's a pro-active and fascinating strategy to switch our supply of power to an inexhaustible power source. This file explains the learn about of designing a Solar Powered BLDC Motor-Driven Electric Vehicle which is one of the options for the oncoming crisis. The strategy of choosing the excellent tools for this utility is studied and every of them is simulated and subjected to a number exams in a real-time environment. The built-in setup consists of photo voltaic panels, photo voltaic controller, cost controllers, batteries, BLDC motor, motor controller and different electrical devices, therefore, developed into the Solar Powered Electric Vehicle. Other components include steering, suspension, braking, transmission systems.

Keywords —BLDC motor,hydraulics, Electric Vehicle, chassis, Battery, Motor Controller, Solar Panels, MPPT.

----------**********----------

Introduction:

Using solar panels, an electric solar vehicle primarily utilises energy from the sun. A solar panel is a packaged and linked assembly of solar cells, also called photovoltaic cells, which are solid state devices that, through quantum mechanical transitions, can directly transform solar energy into electrical energy. They don't generate any amount of noise or emissions and need minimal maintenance. Photovoltaic (PVC) cells are mounted on the vehicle to absorb and transform solar energy into electricity. The engine was designed to operate directly on the electricity produced by solar cells. Since the vehicle could run quicker and with substantial torque, the weight of the vehicle was taken into account. The design is designed so that the vehicle has a reasonable weight ratio and has a lower weight and high strength, which is the primary requirement of any solar vehicle. In principle, the design of a motor controller to control the speed and forward / reverse direction of motion of the car has been prepared. The engine was designed to operate directly through the power generated by us through solar vehicle construction as per the Adventure Class Regulation complying with the Rulebook's strict regulations. Our team designs a vehicle that is ergonomically sound, dynamically stable, light in weight and powered by solar energy.

Introduction to ESVC:

The primary objective is to increase knowledge and understanding of inexhaustible energy resources among future generations of engineers and drive them for growth in this field, all while making it fun for them. They are therefore required to build a solar-electric vehicle in order to compete with each other. Student / Faculty / professional vehicle construction as per the Adventure and Professional Class Regulations must comply with the Rulebook's strict regulations.The participating teams design and manufacture their own vehicles that are ergonomically sound, dynamically stable, light in weight and solar driven, and they are fun to drive all along with all of these.

This research paper is focused on the design, measurement and analysis of various vehicle components, so that the vehicle can be built at the lowest possible cost without sacrificing the safety of the driver. To build the frame and model the car, we are using SOLIDWORKS 2018 and testing it against all forms of failure, stresses and deformation. Based on nature, the outcome of measurement and analysis may be altered according to more dimensional changes.

Teams Within This Team:

- Designing
- Chassis Manufacturing
- Suspension
- Transmission
- Braking
- Steering
- Electrical

Team Working Plan:

- Step 01: Rulebook Analysis.
- Step 02: Designing of the chassis.
- Step 03: Cost and Purchasing Plan.
- Step 04: Purchasing of Raw Materials.
- Step 05: Manufacturing of Chassis.
- Step 06: Designing of Suspension system.
- Step 07: Mounting of Suspension and tyres.
- Step 08: Designing of steering system.
- Step 09: flooring of the car.
- Step 10: Mounting of Battery, Motor and Differential.
- Step 11: Mounting of Steering, Braking and Transmission System.
- Step 12: Mounting of the Car body.
- Step 13: Mounting of Solar Panels.
- Step 14: Innovation Round.
- Step 15: Electrical Connections and finalizing the car.
- Step 16: Testing of the Car.

Designing of The Chassis:

Introduction:

The chassis is the major shape that helps the car weight and absorbs affect power in a crash event. The chassis additionally provides to the aesthetics of a vehicle. It is designed to comprise all the automobile subsystems. The graph and improvement method of the roll cage includes quite a number factors; specifically, fabric selection, body design, cross-section willpower and finite aspect analysis. As the car mass, the moments of inertia, and the centre of gravity function would possibly trade substantially in the course of operation, which ought to have an effect on the overall performance of an lively system. The mass of a car is doubtlessly the most quintessential parameter for any sort of dynamics of a street vehicle, as it immediately influences the longitudinal, lateral, energy train, and suspension dynamics for this reason thinking about all these elements the diagram ought to be made. We ordinarily used Solid Works as our main device for designing. SolidWorks is a stable modelling computer-aided sketch and computer-aided engineering pc software that runs notably on Microsoft Windows. While it is feasible to run SolidWorks on MacOS, it is now not supported through SolidWorks. SolidWorks is posted by way of Dassault Systems. SolidWorks is a stable modeler, and makes use of a parametric feature-based method which was once principally developed through PTC to create designs, fashions and assemblies.

Literature Survey:

We took in consideration the constraints as well as the limitations along with the dimensions, while designing the vehicle in the software, which were written in the rulebook issued by the ESVC organizers.Making a model in SolidWorks essentially starts off evolved with a 2D sketch. The format consists of geometry such as points, lines, arcs, conics, and splines. Dimensions are blanketed to the graph to outline the measurement and place of

the geometry. Relations are used to outline attributes such as tangency, parallelism, perpendicular, and concentricity. The parametric nature of SolidWorks skill that the dimensions and members of the family pressure the geometry, no longer vice versa. The dimensions in the diagram can be managed independently, or by using relationships to different parameters inner or outdoor the sketch.

Rulebook Constraints:

- The solar carhas to fit inside a cuboid box of 100 inches (2540 mm) long, 60 inches (1524mm) broad and 60 inches (1524 mm) in height.
- Minimum wheelbase of 60 inches must be provided to the vehicle.
- Track width should be minimum 75% of the wheelbase.
- The fully-laden solar car should have minimum6 inches of ground clearance.
- For adventure class car the weight of the vehicle without the driver must not go over the range of 180 kg.
- Teams are strictly mandated to use seamless circular cross-section tubes only.
- Tube cross-section requirement: -

a. Minimum outer diameter - 1 inches

b. Maximum outer diameter - 2 inches

c. Minimum inner diameter - 1 mm

Jack Point:

There has to be two jack points on the car, one at the rear and the other one at front end. Both jack point should must be coloured orange and they must be oriented horizontally and perpendicular to the centre line of the car. The jack point must be of flat steel plate of dimension - 12 inches (300 mm) long, 2 inches (50.8 mm) wide, 0.1968 inches (5 mm) high, attached to the bottom of chassis.

Hitch Point:

Every carmust have two hitch point one at the rear endand other atthe front end. It will be used to attach pushrod. Every team will have to make their own detachable push rod that should have the potentialto push and pull thevehicle. Hitch point should not be at the bumper. It should be mounted on the frameonly and it should be painted inyellow.

Roll Hoops:

Teams must have a rollover hoop behind the driver. From the rear of the vehicle, the driver's compartment is segregated. From the lowest frame member on one side of the frame to the lowest frame member on the other side of the frame, up, over, and down, a single piece of uncut, continuous, closed steel tubing must be created. With a closed section, the Front Hoop must be made of metal tubing.In any angular location, the top-most surface area of the front hoop should not be lower than the top of the steering wheel. The steering wheel should not be more than 250 mm ahead of the front hoop.This distance shall be measured horizontally, on the vehicle centre line, from the rear surface of the Front Hoop to the forward most surfaceof the steering wheel rim with the steering in the straight-aheadposition. Inside view, no part of the Front Hoop can be inclined at morethan twenty degrees (20°) from thevertical. The main hoop should be protected on both the left and right sides of the main hoop by two braces running in the forward or rearward direction. If the Main Hoop leans upward, the Main Hoop must have the braces upward, and if the Main Hoop leans rearward, the Main Hoop must have the braces rearward.The Main Hoop braces must be fixed to the top of the Main Hoop as close as possible, but not more than 6.3 inches below the Main Hoop 's top-most surface. The angle created by the main hoop and the braces of the main hoop must be at least thirty degrees (30 °). Two braces running in the forward direction on both the left and right sides of the front hoop must be protected by the front hoop.The braces of the front hoop must be built in a way that protects the legs of the driver and extends to the frame in front of the feet of the driver. The front hoop braces should be mounted as close to the top of the front hoop as possible, but not more than 2 inches (50.8 mm) below the front hoop 's topmost surface.

Bumpers:

There should be impact bumper on front and rearof the vehicle. It should be strong and rigidly welded to the mainframe. Itshould be covering outer point of the tires kept in zero steeringposition. The bumper should also be able to bear front impact load, as well as vertical loadup to the100kg. The bumper must start from the base of the chassis, and it should be in vehicle impact zone i.e. 300mm from the lowest part

of the chassis. Preferably bumper should be of continuous tube members rigid enough to bear impact load as well as verticalload.

Side Impact Triangulations:

- Members like theupper side impact member,t h e lower side impact member and the diagonal side impact member are to be located on each side of the driver while seated in the normal drivingposition. *The location of these 3 tubes*

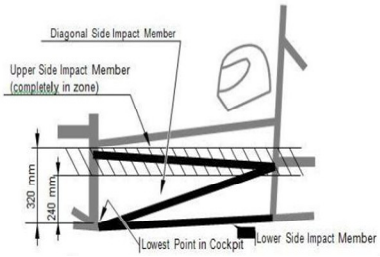

has to be within 240-320 mm from the lowest point of chassis. The upper side ofimpact member must connect the main roll hoop and the front rollhoop. The lower side impact member must connect the lower part of the main roll hoop to the lower part of front rollhoop. The diagonal member must connect the diagonal nodes of the upper side impact member and lower side impactmember.

Nodes:

An association of body contributors projected onto a plane, the place a coplanar, Load utilized in any direction, at any node, effects in solely tensile or compressive forces in the, Frame members. This is additionally what is supposed with the aid of "properly triangulated".

Driver Ergonomics:

- Driver's ergonomic ease should be considered in the design. The teams are to provide ergonomics report, in design report, mentioning occupant'spackaging. When seated unremarkably and restrained by the driver's restraint system, the helmet of a 95th percentile male and every one of the team's drivers should be a minimum of 50 mm removed from the line drawn from the highest of the most hoop to the highest of the front hoop. Be a minimum of 50 mm removed from the line drawn from the highest of the most hoop to the lower finish of the most hoop bracing if the bracing extends backward

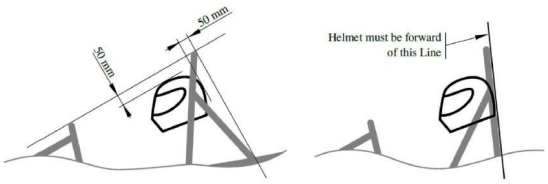

- Driver must be able to get out of the vehicle within 5 seconds (without any outside help).

Design Considerations:

Objective behind creating a design is to describe or tell others, what a designer is thinking. To help others to understand how the end result is going to look like. It helps the team to build-up a plan/strategy to begin with.

Dimension Parameters:

- The wheel base of the chassis: - 60 inches
- Track width of the chassis: - 48 inches
- Height of the rear roll hoop: - 50 inches
- Height of the front roll hoop: - 26 inches
- Total length of chassis (excluding bumpers, jack point or hitch point): - 85 inches
- Width of chassis: - 48 inches
- Height of the chassis (excluding roll hoops) 17 inches.

Material Selection:

In order to extract and quantify the hardness, strength, machining and welding features, the carbon composition in the steel is very prominent. The choice of chassis materials plays a very important role in the design of the entire vehicle, ensuring reliability, protection and durability. The carbon-containing steel improves the hardness of the material.Aluminum alloy is more costly than steel, in which case steel is the chassis production material that is most preferable. Depending on the different factors, such as maximum load capacity, absorption force capacity, weight, rigidity, the chassis material is selected. AISI 1018 is the material used for chassis construction. The mild / low carbon steel is AISI 1018.

Composition of AISI 1018:

Composition	AISI 1018
Iron	98.8 to 99.2%
Manganese (Mn)	0.6 to 0.9%
Carbon (C)	0.15 to 0.2%
Sulfur (S)	0 to 0.050%
Phosphorus (P)	0 to 0.040%

Properties of AISI 1018:

S no.	PROPERTIES	VALUES
1	Tensile strength, Ultimate	450 MPa
2	Tensile strength, Yield	380 MPa
3	Bulk Modulus	200 GPa
4	Shear Modulus	80 GPa
5	Modulus of Elasticity	200 GPa
6	Poisson's ratio	0.29
7	Elongation at break	16%

The composition of the material:

1. Carbon 0.18
2. Manganese 0.73%
3. Silicon 0.18%
4. Sulphur 0.017%
5. Phosphorus 0.020%

Work to be Done:

After taking all the dimensions in account and also the limitations provided by the rulebook the designing of the chassis of the vehicle has to be carried out. And then designs of various parts of the vehicle has to be assembled in the designed chassis with the help of assembly command in designing software.After designing of the vehicle various simulations were carried out using certain software.At the end body of the vehicle is to be designed.

Work Place:

- CAD LAB
- WORKSHOP
- HOSTEL ROOM (Residential Quarters)

Work Plan:

1. We will start designing the chassis with the dimensions of track width, wheel base, maximum height and the agronomic.
2. We will prepare the chassis design using 3D sketch command
3. After completing the design, we will use weldments command so that material can be applied on the chassis.
4. After applying material to the chassis, we will run stress strain simulation on it to test the strength of the chassis.
5. After running all the analysis or simulations we will collect other parts for vehicle like seat, wheel, tires, motor, battery, etc., online and then install them in the chassis y using assembly feature of the software.

- Then we will make the outer body of the vehicle separately and then put it on the assembled chassis using assembly feature.

Designing of The Suspension System:

Introduction:

The altogether target of a suspension mechanism is to absorb impacts and jerks from course irregularities, such as bumps, and distribute that force with the least amount of discomfort to the driver; without compromising on the agility of the

vehicle. The suspension not only dictates the path of the relative motion but also controls forces transmitting from the sprung and un-sprung mass.

Literature Survey:

The aggregate sum of weight transferring is just influenced by four factors: the separation between wheel centres (wheelbase on account of braking, or track width on account of cornering) the tallness of the centre point of gravity, the mass of the vehicle, and the measure of speeding up/acceleration experienced. The general motivation behind a suspension framework is to assimilate impacts from course abnormalities, for example knocks, and convey that power with minimal measure of uneasiness to the driver; without compromising on the agility of the vehicle. The suspension not just directs the way of the relative movement yet additionally controls powers transmitted by sprung and un-sprung mass.

Rule Book Constraints:

On both wheels, the use of the suspension system is obligatory. The vehicle must be fitted with a fully functioning suspension system with shock absorbers and safety equipment. It also has the potential to run on off-road terrain. The judges are allowed to disqualify vehicles which do not demonstrate a serious attempt at a functioning suspension assembly or which demonstrate improper handling of a qualifying circuit.Usage of the suspension system on both wheels is mandatory. The vehicle must be fitted with a fully functioning suspension system with safety guards and shock absorbers. It also has the potential to operate on off-road terrain. Judges are allowed to disqualify vehicles which do not demonstrate a serious attempt at a functioning suspension assembly or which demonstrate improper handling of a qualifying circuit.

Force consideration:

Material is isotropic, direct. The static examination is utilized to decide the diversions, stress-fixations in the structure brought about by applied loads or effects. The hard-purposes of the suspension framework are taken from the structured. Since the Outer, internal and upper purposes of An arm can be joined interminably; it is joined such a way, that it is fundamentally sufficiently able to take all the heaps following up on it. Wishbones have been investigated for knock and braking situations. Proper Mesh size is considered after a few cycles and Convergence is guaranteed.

Working Principle:

The wishbone type is the most popular independent suspension system.

•It consists of 2 wishbone-shaped arms to find the wheel. every wishing bone or arm has 2 mounting points to the chassis and one joint at the knuckle.
•The damper and spring mount to the wishbones to manage vertical movement.
•The vehicle weight is transmitted from the body and also the cross member to the spring through that it goes to the lower wishing bone member.
•The higher arms area unit shorter long then the lower ones. This helps to stay the wheel track constant thereby avoiding the tyre scrub so minimizing wear.

Design Considerations:

Vehicle dynamics is the study of the performance of the automobile in all of its motions (ride, acceleration, cornering, and braking). The vehicle's suspension plays a key role in each of these motions. Suspension. Kinetics is an examination that is essential to the vehicle's overall functioning because it is what determines whether the vehicle is capable of absorbing ground loads; it is what determines the driver's ease and protection, it is what determines whether or not the vehicle can roll; and it is what determines the suspension, shock and tyre resonant frequency. We shall only deal with Vehicle ride modelling in Suspension Kinetics. However, before each of these models are considered it is important to define the vehicle axis and the appropriate rotations about each of the axis.

Dynamics analysis:

The Front suspension specifications are as follows:

1. Type: Double Wishbone with unequal A-arms.
2. Materials: AISI 1018 1"x3mm for both upper and lower A-arms.
3. upper Aarm length: 370mm

4. lower Aarm length: 380mm
5. Caster: -4 degrees
6. Camber: 3 degrees

The Rear suspension specifications are as follows:

- Type: Semi Trailing arm (single control arm) suspension with integral upright.
- Material: Flame hardened carbon steel swing arms
- Length: 558.8mm
- Camber: 0 degrees (fixed)

Design:

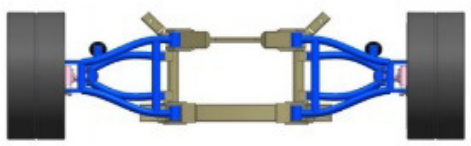

Front View

Work to be Done:

After taking all the dimensions in account and also after taking all the calculations related to the angle of the suspension i.e., camber caster and toe. We will attach a suitable suspension to each wheel. And we have decided that we are going to fit telescopic type suspension at the front wheels and for the rear we want to attach mono-shock suspension, which we have seen in many bikes like R15, Yamaha FZ etc.

Work Place:

- CAD LAB
- WORKSHOP
- HOSTEL ROOM (Residential Quarters)

Work Plan:

1. We will start by getting the calculations and the angles at which our wish bone of the vehicle should be.
2. After getting all the required calculations regarding the suspension we can easily move forward to the hub and its design which we will discuss with the team of design.
3. Firstly, we need a tyre to get the position and calculation regarding the hub design and more.
4. After completing the design for the Wheel Hub, we have to search a manufacturer that can take our design and get us the hub we desired.

Designing of the Braking System:

Introduction:

Street vehicle rely on the braking mechanism to minimize the speed of the vehicle and inevitably to prevent the moving vehicle. in a very braking mechanism, once the pedal is pushed by the motive force the restraint are pushed towards the rotating rotor and build contact and therefore friction is formed. The K.E. of the moving vehicles are born-again to energy, thanks to the friction between the pad and the disc rotor..

Literature Survey:

A brake is a mechanical device that restrains motion by way of protecting electricity from a transferring framework. It is utilized for easing returned or halting a shifting vehicle, wheel, hub, or to stop its movement, regularly cultivated through techniques for grinding. Street vehicle depends on the slowing mechanism to decrease the speed of the vehicle and in the end to stop the moving vehicle. In a slowing mechanism, when the pedal is pushed by the driver the brake pads will be pushed towards the turning rotor and make contact and thus friction is created. A solar car must be fitted with all-wheel brakes, operated by a single control and hydraulic braking system. It must have two hydraulic circuits that are separate. Schemes of 'brake-by-wire' are forbidden.

It is appropriate to have one brake operating on a limited slip differential. The vehicle does not brake at more than 30 degrees. The brake must be capable of holding the fully loaded solar car at an incline or decrease of 20 degrees. Force consideration. On the theory of Pascal 's law, hydraulic brakes operate. Whenever pressure is applied to a fluid, it moves evenly in all directions, according to this law. Therefore, when we apply force on a small piston, it develops pressure that is transmitted to a larger piston through the fluid.The hydraulic braking system is the type of braking system in which the brake force applied by the driver on the brake pedal is first transformed by the master cylinder into hydraulic pressure when this hydraulic pressure is transferred from the master cylinder to the final brake drum or disc rotor through the brake lines.In hydraulic brakes, brake fluid is used instead of mechanical connexions to transmit the brake pedal force in order to stop or de-accelerate the vehicle. Thanks to its high performance and high brake power, almost all bikes and cars on the road today are fitted with a hydraulic braking system.When the driver pushes the brake pedal mounted inside the cockpit or at the foot of the vehicle with his foot, the brake form with which the brakes are applied is further multiplied by this pedal force applied by the driver and transmitted to the braking drum or disc either by mechanical connexions or by hydraulic pressure, which in turn triggers braking.

1) Requirement of a Braking System:

A brake is a mechanical machine that inhibits action through absorbing strength from a shifting system. It is used for slowing or stopping a shifting vehicle, wheel, axle, or to stop its motion, most regularly carried out via skill of friction.

Rulebook constraints:

A solar car must be furnished with brakes on all the wheels, controlled by a single controlling mechanism and must be hydraulic braking system.It must have two independent hydraulic connection circuits." Brake-by-wire" systems are prohibited.Single brake acting on a limited slip differential is acknowledgeable.The vehicle should not disbalance more than 30 degrees under braking.Brakesshouldhave the capability of holding the fully-laden solar car on a 20-degree incline or decline.

Brake pedal force:

- Fbp = Fd. L2/L
- 160.6
- Fbp = 960N

Component Selection:

- Disc Pads
- Brake Fluid
- Rotor
- Stator
- Callipers
- Brakes shoes
- Master cylinder

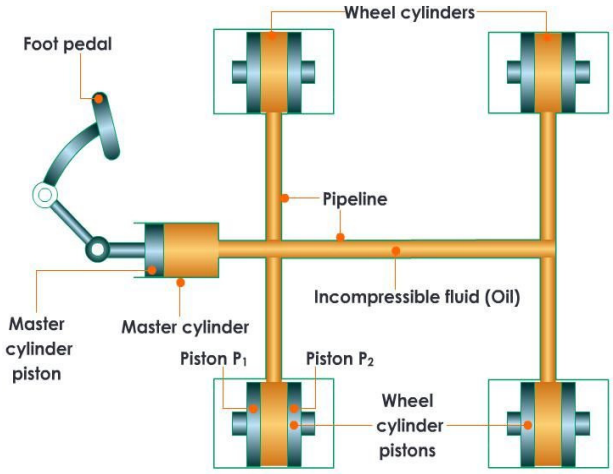

Calculation:

- BRAKE TYPE = Disc breaks all wheel
- DISC / rotor Used TVS Apache RTR
- Disc Size = 200.mm

- Calliper TVS Apache RTR 18o double Pistol
- PITA Master Cylinder- Maruti 800
- Colbie Diameter - 25mm
- Master Cylinder Diameter = 19.5mm

Static Weight Distribution:

- **Rb** = 3556.125N
- **Ra** = 2035.575
- **% F**= $\frac{2035.575}{5591.7}$ x 100= 36%
- **%R**= $\frac{3556.125}{5591.7}$x 100 = 64%

Dynamic Weight Distribution:

- **Lf**= .36X570+ $\frac{160*0.6104}{1.7272}$
- **Lf**= 266.37N
- **Lr**= .64X570+ $\frac{160*0.6604}{1.7272}$
- **Lt= Lf + Lr =** 570N
- **%F**= $\frac{266.37}{570}$ = 47%
- **%R**= $\frac{303.62}{570}$ = 63%

There are two types of breaking situation:

1) With slip
2) Without slip

Calculation for Without slip:

Apache RTR 180
Diameter of Disc= 200mm
Master cylinder = Maruti 800
Diameter of bone MC = 19.5mm
Pedal force from normal braking is 160N and pedal ratio is 6:1
Brake pedal force
Fbp = Fd *$\frac{L2}{L1}$ => 960N
Master Cylinder Pressure = Pmc=$\frac{Fbd}{Amc}$ = 3.21M/mm^2
The pressure at m.c. is equal to pressure at caliper
Pmc= Pcal
Fca= Pcal x Acal
➔3.21*66018
➔2119.79N
Total clamping force
F = Fcal *2= 4238.38N
Friction Force = 9238.38*.45
= 1695.35N
Braking Torque
Tr= friction * R
1695.35 X 180
305163.38 Nmm
Force on tire
F= $\frac{305163.38}{317.5}$= 961.144N
Total force on 4 wheels = 3844.56N (f X 4)
Total Deacceleration, a= $\frac{-3844.56}{570}$
a=-6.745m/s^2
Considering optimum velocity of 30kmph
V=$\frac{30\ X\ 10^3}{3600}$ = 8.33m/s
If 50Km/h
V=$\frac{50\ X\ 10^3}{3600}$ = 13.88m/s
Stopping Time, t =$\frac{8.333}{6.745}$ = 1.2355
t = 1.2355
Total time (T) = t + driver's reaction time
T = 235 +1.5 = 2.7355sec
2.05+1.5 ➔3.15 Sec
Stopping distance S= $\frac{8.333^2}{2\ X\ 6.745}$ = 5.14m
S = $\frac{13.888^2}{2\ X\ 6.745}$

Calculations for With Slip:

Total Normal force
N= m x g
570 x 9.81
N=5591.7N
Total frictional force
F=μN = .7 * 5591.8➔3914.19N
F= 3914.19N
Total deacceleration
A= $\frac{3914.19}{570}$= 6.867m/s^2
Stopping time = $\frac{v}{a}$ = $\frac{8.333}{6.864}$ = 1.21sec
Total time = 1.21+1.5➔2.71sec
2.02+1.5➔3.15sec
Stopping distance = S =$\frac{v^2}{a}$= $\frac{8.333^2}{2\ X\ 6.864}$➔5.05m

Speed	Distance	Time(S)
30	5.14	2.735
40	9.14	3.14
50	14.2	3.15

Work to Be Done:

After the body frame is complete. The Axel's ends are attached with hydraulic cylinder in all the 4 ends

connecting the discs, break lines. Those all cylinders are connected to one cylinder which is further connected to a single cylinder called the master cylinder and then to the break paddle. After this the rest of the wiring is done and the assembly of braking system is complete.

Work Place:

- Workshop
- Cad lab

Work Plan:

1. The 4 cylinders are assembled on the 4 ends of an axel connecting to the tube which supplies the hydraulic fluid and the cylinders are covered with discs and the wheels are to be place on them.
2. The all four cylinders are now connected using the wipe which flows the hydraulic fluid and these pipes are connected to one single pipe
3. The single pipe is the connection to master cylinder which is directly in contact of the brake paddle.
4. The whole system works on Pascal law as the foot paddle is pressed the vehicle slows down and the rest of the screwing is done to the body frame.

Designing of the Transmission System:

Introduction:

A transmission could be a tool during a power transmission, that provides controlled distribution and application of the ability. typically, the term transmission refers merely to the case that utilizes gears and kit trains to supply and maintain speed and force conversions from a rotating power supply to a different device.

Literature Survey:

In motor vehicles, where the transmission changes the output of the internal combustion engine to the drive wheels, regular use is accomplished. These engines must run at a reasonably high rotational velocity, which is unsuitable for starting, stopping and slower movement. The transmission lowers the higher speed of the engine to the slower speed of the wheel, raising torque in the process.Sometimes, as speed increases or decreases, a transmission has many gear ratios (or simply "gears") that are able to move between them. This transition can be performed either manually (by the operator) or automatically.

Rulebook Constraints:

The Authorized Traction Motor is a BLDC motor with a maximum power of not more than 4,5 kW. The International Electro Technical Commission (IEC) 60529 IP67 (i.e. no entry of dust or water) shall comply with all components (motor, controller, connector). If the team fails to generate a certificate, complex incidents won't count. Teams shall only use the components approved by the ESVC Technical Committee in the construction of their vehicle powertrain.

Calculations:

Peak Torque = (Vehicle mass + Battery) x gravity caused by acceleration x Wheel Radius x Slope%
= (140+40) x 9.8 x 0.22 x 0.1 N-m
= 38.80 N-m
Power Required (Peak)
= Torque x Angular Velocity
= 38.80 x 30 Watt
= 1164 Watt
AIR RESISTANCE-
Resistance due to air = (5 / 100000) x mass of vehicle x (Average Speed)^3
= (5 / 100000) x 180 x 30^3
= 243 Watt
ROLLING RESISTANCE-
Resistance=mass of vehicle x0.092x average speed
= 0.092 x 180 x 30
= 497 Watt
CONTINUOUS POWER REQUIRED-
Power Required = Resistancedue to rolling + Air Resistance = 243 + 497 = 740Watt

Designing of the Steering System:

Introduction:

In such a way that the steering wheel rim twists a long way to shift the road wheels a short way, the steering mechanism translates the steering wheel rotation into a swivelling movement of the road

wheels. The system allows the driver to control a heavy car using only light forces.

Literature Survey:

After all it is important to steer a vehicle and give direction. According the dimensions of vehicle we need to build a steering system of 6:1 (6 cm movement of Rack and 1 cm movement of Pinion) to proper steer avoid any skid, overturning. Always consider the weight of steering system.

Rulebook constraints:

We put the steering wheel as high as the driver's abdomen and below the shoulder line. In the event of an impact / accident, the steering wheel should be mounted in such a way that the danger of a driver being hurt is reduced. While gripping the steering wheel, the driver should not suffer any form of excessive restrictions or pressure. For both sealing and locking ends, lock nuts are mandatory.

Design considerations:

Design procedure provides detailed description of the proceedings done/ steps to be taken while designing the steering system so as to meet the objectives and the targets in time. By discussing with other departments, the track width and wheel base were decided and readings were put into calculations. In order to achieve steering targets, trials were carried out by virtual simulation on hit, trial and error basis method to decide the dimensions of parts and the equipment used.The effects were studied by determining the output values from the trials and analysing the value of the parameters.

Component selection:

1. Tie rod,
2. Rack and Pinion gear,
3. Steering yoke,
4. Steering coupler.

Working Principle:

The lines drawn across each of the four-wheel axes should converge at the instantaneous centre point to achieve true rolling for a four-wheeled vehicle travelling on a curved track. Due to the adjustment of the front wheel angular positions to correct the steered vehicle's direction, the actual position of the instantaneous centre continuously varies.Subsequent customized linkage utilizes inclined track-rod arms so that the inner wheel swivels about its king-pin slightly more than the outer wheel.

Result:

Turning Radius: d/2+Lcosec (A/2+B/2)= 3.2m
Steering Ratio: 6:1
Steering Angle: 60degree
Camber: Not more than 2 degrees.

Work to Be Done:

The connections through each and every steering components has been done according to the limitations provided by the rulebook. The main function is to connect the steering system to the wheels of a vehicle and steer the vehicle without any major difficulties.

Work Place:

- Workshop
- Cad lab

Major Electrical Components Within the Car:

1. Lithium Ion Battery (100Ah, 48 Volts)
2. BLDC Motor (48Volts, 2.5KW, 3000rpm)
3. BLDC Motor Controller (KLS7245HC)
4. Solar Panels (24 Volts)
5. Speed Sensor
6. Throttle
7. Indicators
8. Headlights
9. Tail Lights
10. MPPT (Maximum Power Point Tracking)
11. Ignition
12. Gear Shifter
13. Speedometer
14. 12Volt Battery (Lithium Ion)

Work to Be Done:

The connections through each and every electrical component has been done according to the limitations mentioned in the rulebook. The major connections are from battery to motor which is further passing through Battery management system. Minor calibration has been done to certain electrical components like controlling the fluctuated current from solar panels calibrated by MPPT.After

connection of various electrical components testing has been done through electrical testing devices.

Work Places:

- Electrical and Electronics lab
- Workshop
- Calibration Shop

Work Plan:

1. We will understand the wiring of the motor controller because each component will be connected to the motor controller.
2. Different type of colour of wire have different use for example red and black are used for battery terminals and orange for ignition.
3. After understanding the function of each wire, we will first connect primary battery connection with controller and motor
4. Whereas our secondary 12-volt battery will be connected to low volt components like horn, indicators, lights etc.
5. After checking every connection, we will mount each component on the chassis.
6. After double checking the connection, our vehicle will be ready for its first test drive
7. After that we have to adjust the solar panels according to the sun location
8. Then we will check the fluctuations from the solar panels and calculate about how much energy or output does solar cells give to the battery.
9. After checking all these things electrical system will be properly mounted, connected and set.

Battery:

Introduction:

The need for a lightweight rechargeable cell to power the rapidly rising market for portable electronic equipment in the 1990s was motivated by the advent of lithium-ion cells. Technology has become the power source of choice for everything from cordless power tools to large-scale energy storage and automotive applications, starting with cameras and cell phones. The most important factors that make them indispensable in mobile phones and electric vehicles alike are the high energy density and the large number of discharge cycles given by lithium-ion cells.

Literature Survey:

Over the past few decades, the biggest developments in solar vehicles have been attributed to improvements in battery technology. Initially, automobiles used lead-acid batteries; most combustion engine cars do use chemistry. Although this type of battery is inexpensive and manageable, lead-acid cells can account for almost half the weight of a traditional solar vehicle. The use of nickel-metal hydride (NiMH), nickel-cadmium (NiCad), lithium ion and carbon batteries has resulted in advancements in technology that have better power-to - weight ratios than lead-acid batteries. With respect to most stationary applications, the surface of solar panels on a car is limited. Therefore, by analysing and solving the issues that might reduce their performance , it is necessary to optimise their power extraction.

Rulebook Constraints:

1. Maximum Normal Voltage of Accumulator for Adventure class allowed is 60 V and 20 MJ.
2. Maximum Normal Voltage of Accumulator for Professional class allowed is 72 V and 38 MJ.
3.Teams have the only choice to use Li-ion battery pack. Teams will not be allowed to change batteries. They need to use the same set of batteries throughout the event.
4. Teams are allowed use a separate battery of max 12V (Li-Ion or Lead Acid Battery), for the following mentioned function, and this function/ gadgets/ equipment must be installed in the vehicle:

a) Innovations.
b) Horn.
c) Battery level indicator.
d) Brake light.
e) Side indicators.

- The cover material of the battery pack should be covered and properly protected against fire and electricity. It is not allowed to use adaptable elastic or plastic sheets as covers. Additionally, with a protective coating, the battery cover can consist of inflexible plastic / glass fibre / sheet metal. Nylon links, cords or wire of any kind are not permitted for mounting. It should be rigidly mounted. The battery kit should be fixed / welded / attached (using lock nuts) to the chassis. There must be a spill-proof barrier between the storage pack and the occupants of solar cars if the power storage pack is capable of spilling hazardous liquids when damaged. If the power storage pack is capable of leaking hazardous gases when

harmed, a proper ventilation system must be designed — between the storage pack and the occupants of the solar car. The cover should be de-attachable, and it can be efficiently expelled from batteries whenever needed.There should be a restricted convection framework installed, with the ultimate aim of pushing air from the atmosphere into the battery for cooling purposes. For this purpose, groups may use cooling fans or hoses. A self-made or collected battery pack is not allowed. It is compulsory to use the power management system with a battery pack. Initial GST bills must be submitted in front of the technical inspection team for the battery pack.

Load Considerations:

LITHIUM ION BATTERY

- Current :100Ah
- Voltage:48 volt
- Power:4800watt
- Cycles:1500
- Cell capacity 3.2v and 2.6 ah
- Types of battery :13s25p

Design Consideration:

Weight:27

Component Selection:

Types of battery :13s25p

Calculations:

Energy calculation:
Power = voltage * current
= 48*100
= 4800 w
Energy consumed by motor in 2 hours
➔4800*2➔9600WH

Motor:

Introduction:

The motors used in solar cars typically generate about 2 or 3 horsepower, yet experimental light solar cars may attain the same speed as a typical family car (100 mph (160 km/h)).

Rule Book Constraints:

The Allowed Traction Motor Allowed Traction Motor shall be a BLDC motor with Peak Power not more than 4.5 kW. All components (Motor, Controller, Connector) shall follow International Electro technical Commission (IEC) 60529 IP67 i.e. no dust or water entry.

Load Considerations:

- Total Weight of Car: 160 kg
- Weight of Motor:
- Size of Motor:
- Specifications of Motor considered here: 48 Volts, 2.0 kW.

Working Principle:

Solar automobiles extract strength from the solar by means of altering it into electricity. This electricity energizes the battery that powers the motor. Rather than utilising a battery, some photo voltaic motors direct the energy straight to an electric powered motor.

Solar motors make use of photovoltaic cells to flip daylight into energy. Photovoltaic cells are the elements in photo voltaic panels that flip the sun's electricity to electricity. They're constructed up of semiconductors, typically silicon, that take in the light. The sun’s strength frees electrons in the semiconductors, growing a waft of electrons. That drift generates electrical energy that powers the battery and the specialised motor in photo voltaic cars.

Design Consideration:

The engine was designed to work directly from the power produced inside the solar cells. Since the vehicle could run quicker and with substantial torque, the weight of the vehicle was taken into account. The design is designed so that the vehicle has a reasonable weight ratio and has a lower weight and high strength, which is the primary requirement of any solar vehicle. Also considered was the design, coding and wiring of a motor controller to control and sustain the speed and forward / reverse direction of motion of the vehicle.

Component Selection:

The BLDC motor is employed because the drive motor for the vehicle. it is a magnet sq. wave motor. BLDC motor uses feedback directly of the rotor

spatial relation in order that the input coil current are often switched among the motor phases in actual synchronisation with the rotor motion. The load check expressly represents the vehicle's speed with reference to the load. For a vehicle, no matter the motive force, the parameters that have an effect on the speed of the engine and so have an effect on the speed of the vehicle area unit the wind force, friction, incline or decrease of movement and therefore the weight of the vehicle (for a solar-powered vehicle; for a solar-powered vehicle; for a solar-powered vehicle; for a solar-powered vehicle; for a solar-powered vehicle; for a solar-powered vehicle; for a solar-powered vehicle; for a solar-powered vehicle; for a solar-powered vehicle; for a solar-powered vehicle; and therefore the magnet generates rotor flux, and magnetic attraction poles area unit created by the stator coil. The rotor is attracted by a rotation created by the energised stator coil method. To perform change, the BLDC motor needs AN electrical converter and an edge detector.

Calculations:

- Power = 4800W
- Voltage = 48Volt
- Continuous Torque = 7.25Nm
- Peak Torque = 24Nm
- RPM = 3000rpm

Motor Controller:

Introduction:

A motor controller is AN electronic part of a drive system that converts a DC voltage into a three-phase AC signal that may drive AN AC motor. The motor controller converts the DC to AC utilizing a 6step electrical converter that is actualised with high force MOSFETS. It goes concerning as a passage between the motor and batteries. It helps screen and directs all key exhibition signs, for instance, the vehicle's operator, motor, battery, and foot pedal. it's a chip that may prohibit or divert current.

Design Consideration:

The motor controller is meant to manage the speed of rotation of the motor still because the direction of its rotation. In alternative words, it determines the car's speed and forward/reverse the direction of movement of the wheels. The force expected to push a vehicle is set by connexion the powers that ought to be applied to the vehicle to maneuver it with the vehicle speed at that this moving power should be supported. The drive force generated by the motor for the wheels made a thrust at the tyre/road contact. it's this drive power that moves the vehicle. At the planning stage, it's easier to conduct the calculation around this thrust instead of the drive force. The all out drive power that must follow au fait the vehicle to create it move (or keep it moving) is assessed by as well as singular power to overcome the moving obstruction of the wheels on the drive surface power to defeat efficient drag and power to accelerate the mass of the vehicle.

Component Selection:

- Controller: The controller will be a chip or a microcontroller.
- Motor Driver IC: These square measure sometimes current amplifiers that settle for the low current signal from the controller and switch it into a high current signal which will facilitate to drive the motor.
- Motor: Motors square measure explained as an electrical or mechanic device that has the potential to develop motion. whereas interfacing with the controller; a number of the motors like DC motor, stepper motor, and brushless dc motor may want a driver IC or driver circuit. DC motor could be a variety of motor that may convert DC into mechanical power. in a very brushless DC motor, it consists of a DC power supply, AN electrical converter manufacturing AN AC signal to drive the motor. whereas stepper motor could be a brushless DC motor that changes electrical pulses into separate mechanical motions. Power offer Unit: Provides the desired power to the motor drive.
- Power Supply Unit: Provides the required power to the motor drive.

Solar Panels:

Introduction:

Solar panels soak up daylight as a supply of strength to generate direct modern-day electricity. Photovoltaic modules use mild power (photons) from the Sun to generate electrical energy via the photovoltaic effect.

Literature Survey:

Solar panels absorb daylight as a supply of energy to come up with electricity electricity. electrical phenomenon modules use lightweight energy (photons) from the Sun to come up with electricity through the electrical phenomenon impact. the basic half to construct a star automotive is that the solar battery. The star cells accumulate a contact of the sun's vitality and keep it into the batteries of the famous person vehicle. Before that happens, energy trackers convert the electricity accrued from the photo voltaic panel to the right gadget voltage, in order that the batteries and additionally the motor will make use of it. as soon as the strength is maintained away inside the batteries, it is handy to be used by using the motor and motor controller to power the vehicle.we tend to square measure progressing to utilize 2 arrangements of batteries; one amongst which is able to get the power from the panel to drive the engine and another are used as a helper power supply which is able to provide the mandatory capability to different electrical gadgets being used within the vehicle.

Rulebook Constraints:

Teams are not allowed to place panels on the roof or over the head of the driver. Teams can place the panel on side of the driver, but they must ensure proper heat and electric insulation, and position of the panel must not restrict driver's egress and ingress. The position of the panel should not be higher than shoulder line of the driver.Panels should be positioned so that they can be detached for easy inspection of interior system and mechanism of the vehicle. They can be either completely detachable or contain a hinge at one end so that they can be lifted for inspection.

Load Consideration:

- Weight of Car: 160 kg including 20kg of solar panels
- Specifications of Motor considered here: 48 Volts, 2.0 kW.

Design Consideration:

Photovoltaic modules, typically recognised as photo voltaic modules, are the key components used to convert daytime into power. Solar modules are composed of semiconductors that are basically the equal as these used to make coordinated circuits for digital hardware. The most established variety of semiconductor as of now being used is made of silicon crystal. Silicon crystals are blanketed into n-type and p-type layers, stacked on one another. Light putting the crystals initiates the "photovoltaic impact," which creates power.

1. 157 x 157 mm, 19.2% eff means 4.67 watt of **Solar mono cells**
2. 4mm thickness (size is around 1000 mm x 1000mm) Colour White of **Solar Eva**
3. 35mm thickness (size is around1000 x 1000 mm) of **Back sheet**
4. 1.5 mm width of **Tabbing wires**
5. 5 mm width of **Bus wires**

Designing of Solar Controller/MPPT:

Introduction:

The sparkling star of today's solar systems is the MPPT solar charge controller. These controllers really know the solar panel display 's best working voltage and amperage and balance that with the electric cell bank. The effect is an estimated 10-30 percent more force from your sun-situated party compared to a PWM controller. For any solar electric systems of more than 200 watts, speculation is usually worthwhile. Basically, a charge controller or charge regulator is a voltage as well as a current controller to shield overcharging batteries. The voltage and current coming from the solar panels that go to the battery is controlled.

Rulebook Constraints:

Teams are not allowed to place panels on the roof or over the head of the driver. As shown in the below image.Teams can place the panel on side of the driver, but they must ensure proper heat and electric insulation, and position of the panel must not restrict driver's egress and ingress.The position of the panel should not be higher than shoulder line of the driver. Panels should be positioned so that they can be detached for easy inspection of interior system and mechanism of the vehicle. They can be either completely detachable or contain a hinge at one end so that they can be lifted for inspection.

Load Considerations:

The "load terminals" on most Charge controllers are there for very small wattage loads like lights. They are usually not designed to handle anything that draws more than a couple of amps.We should only use the solar panel and battery terminals on that charge controller. Make sure you use a wire large enough to handle the full amps of the battery voltage.Tractive system should be properly fused. It will control lighting or other loads for specified hours of the night.

Working Principle:

A solar charge controller is fundamentally a current or a voltage controller to charge the battery and to protect the cells from overcharging. It directs the current and voltage originating from the solar panels to charge the battery.

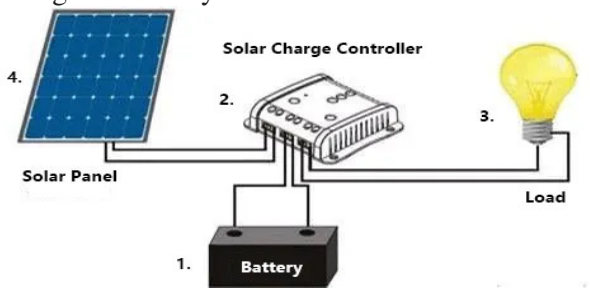

Components Selection:

- **SOLAR PANEL**: embody hardware to for good discovered the system to either a roof, a pole, or the bottom. These arrays area unit essentially composed of aluminium 13|metallic element metal} and area unit chosen supported the particular model and number of modules within the system further because the needed physical propositions. star Panels work best at lower temperatures, and correct aggregation permits for cooling flow of air round the setups.
- **COMBINER BOX**: A combiner box is AN often-overlooked, however important a part of most star electrical systems. The combiner box is AN electrical enclosure that permits multiple star panels to be combined in parallel.
- **SOLAR INVERTERS**: AN electrical converter takes (DC) from batteries and turns it into (AC) that is employed to run the foremost common electrical masses. There area unit 2 main categories of inverters, or grid-capable and, standalone units.
- **DC AND AC DISCONNECT**: The DC and AC disconnects of a PV system area unit manual switches that area unit capable of removing power to and from the electrical converter.
- **SOLAR INVERTERS**: :Aninvertertakes (DC) from batteries and turns it into (AC) which is used to run most common electrical loads. There are two main classes of inverters, or grid-capable and, standalone units.
- **DC AND AC DISCONNECT:**The DC and AC disconnects of a PV system are manual switches that are capable of cutting off power to and from the inverter.

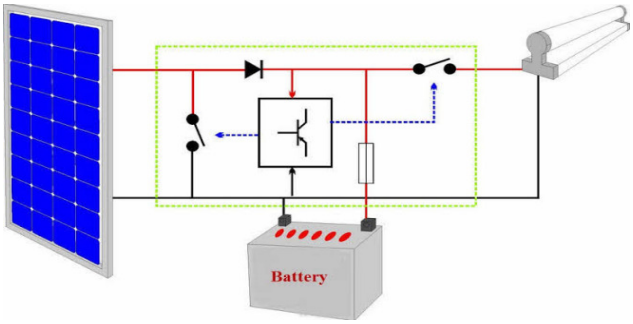

Wiring Diagram and Accessories:

Introduction:

Wiring is the insulated conductor that conducts electricity. The wire that is utilized in a structure, for example, a domestic or an industrial facility is referred to as constructing wire. The wire interior a bit of equipment is generally known as gear wire. A wire is measured with the aid of its diameter. This

dimension is recognised as the wire gauge. Wire gauge operates in reverse numerical order. In different words, the greater the gauge number, the smaller the wire diameter.

Rulebook Constraints:

All components mainly live wires, contacts, and so on of the electrical framework have to be limited through a non-conductive material, shielded from being contacted. Teams are now not supposed to make use of electrical tapes for protection, as something damaging adequate of unfavourable tape can damage single-layered protection. Groups must provide twofold layered protection; it can be performed by way of bolstered insulation of single-layered insulation wires. Inside this strengthened insulation, bundles of wire. All wires, connectors and hardware modules, (for example, MPPTs) which continue to be at excessive voltage need to be twofold protected. Wires have to no longer go beneath the base body of the vehicle. Motor, suspension, wheels, steering, need to be sealed through a lock nut. Electrical wiring should be properly done and it should not disturb the ergonomics of the driver or entangle with any parts of the driver.Loosely hanging of wires must be avoided.Wires should be properly covered using external hoses, wiring of electric and electronic system and tractive system can be done separately.Proper automotive grade wiring connector must be used for all types of wirings in vehicle. Avoid using wire joints covered with tapes.

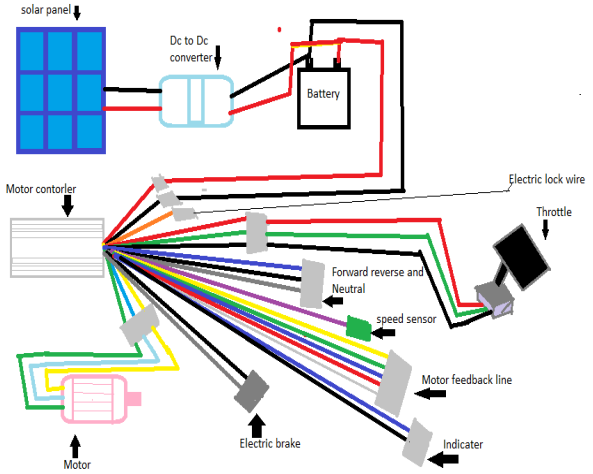

Experience and Knowledge Teammates Gained:

First, we thoroughly read the rule book instruction given to us. To begin with the designing process of chassis first we choose a software (Solid works, because of its availability and easy to use as compare to other software like Catia, etc). And prepared a sketch of it on paper. Afterwards we start designing by taking account of track width and wheel base, drawing a rectangle using them. In that rectangle we drew the base of the chassis as drawn in the sketch. After giving the base shape we move on to make roll hoop (both front and rear). After making roll hoops we prepared rest of the it. Now, after completing 3D sketch of chassis we start giving triangulation to its base, front, rear sides to make it impact resistant and distribute load equally. With triangulation chassis sketching is done. Now with the help of weldments feature in Solid works we replaced the sketch lines in it with material we are going to use which is 1018 mild steel Hollow seamless pipe. Now to check the strength of it we did stress strain analysis on it. After preparing chassis design, we purchased the material for making chassis (1018 mild steel Hollow seamless pipe) and begin the construction of the chassis. As the design was prepared (starting from the base) similar in manufacturing process we begin with the base shape of chassis. Since we prepared the design first so we have the measurement and the idea in which Materials has to be cut and to join the cut pieces of pipe I use mid welding. With the reference of the design we prepared, manufacturing is completed easily. While we were working on manufacturing of chassis our other team mates ordered other modules of the vehicle like shockers, hub, tyres rack and pinion, steering, motor, Kelly controller, battery and etc. By the time we are done with chassis manufacturing we got tyres, hub and shocker so started preparing double a- arm wishbone suspension with the help of tyres and taking account of wheel alignment. After bringing chassis on its wheels we start preparing mounting for motor, battery and differential behind the rear roll hoop.

The Designing of the car including Chassis and respective steering, braking and electrical systems are done.

Respective Designs have been finalized.

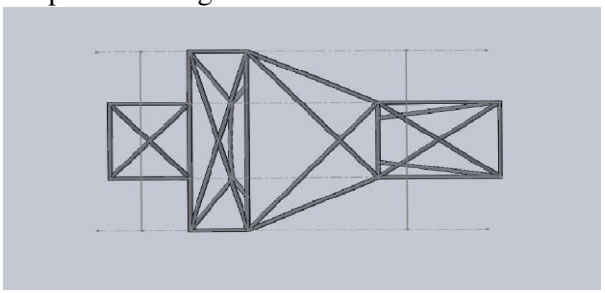

(Top View)

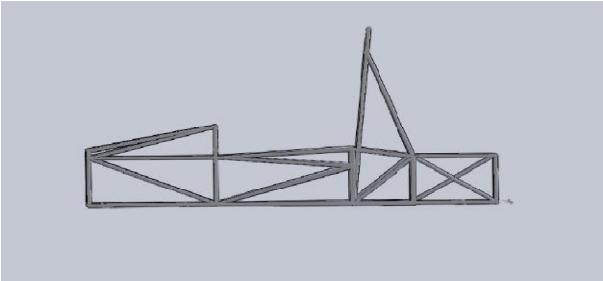

(Side View)

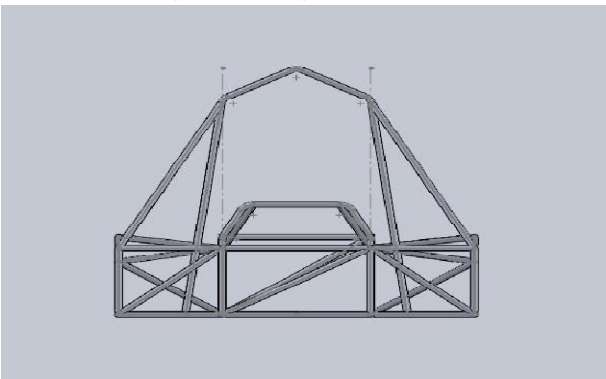

(Front View)

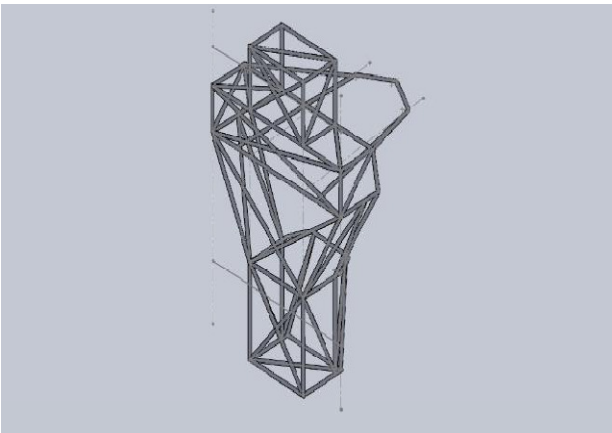

(Isometric View)

The materials used to form the chassis and body components have been finalized.To build the structure properly, Boards were used and markers were used to mark angles and joints so the joints can be made at a proper perpendicular angle.

Bolts and hammers were used to hold the metal rods together so that they could be welded properly.

Basic Structure of the chassis has been built.

Supporting Components of the body which are meant to be mounted on the Chassis have been finalized.Load testing and impact testing of the chassis has been successfully conducted.Markings to install steering, braking and electrical assembly has been done and corresponding calculations have been decided.

- Wheel base-69 inches, track width-52.5 inches.
- Length-98inches Breadth-57inches Height-59inches.

Supporting Components of the body which are meant to be mounted on the Chassis have been finalized.Load testing and impact testing of the chassis has been successfully conducted.Markings to install steering, braking and electrical assembly has been done and corresponding calculations have been decided.Braking Mechanism has been finalized in theory.Design for the Braking Mechanism has also been finalized.Calculations have been done and finalized.All the variables have been taken into account and most accountable form of braking mechanism as per calculations has been approved.

Steering Mechanism has been finalized.All the variables have been taken into account and most accountable form of steering mechanism as per calculations has been approved.Steering Geometry

has been taken care off and camber caster have been put accordingly.

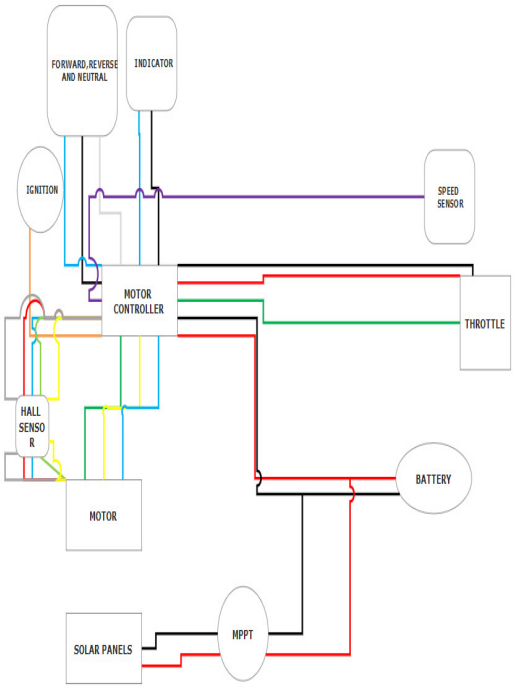

Motors, Motor Controllers, solar panels and other electrical equipment have been finalized.Designing of respective electrical parts have been done.Electrical wiring circuit has been finalized.Motor Controller has been set and programmed accordingly in theory.

Conclusion:

The research focuses upon the design, analysis, and calculation of different parts that are important for the creation of an Electric Solar Vehicle. We have conducted different kinds of static examinations and applied different loading conditions on the chassis. We additionally figure out how to choose fitting material for the chassis. Point by point calculation of brakes is talked about in this paper. Hence, after all the estimations and investigation, it is finally concluded that this Electric Solar Vehicle is safe for creation under healthy engineering practices and meets the performance conditions and targets.

References:

[1] Electric Solar Vehicle Championship, Asia's Biggest Solar Car Event, TECHNICAL RULE BOOK, Season 7.
[2] Abhijeet Das," Design of Student Formula Race Car Chassis", IJSR, ISSN (Online): 2319-7064, Volume 4 Issue 4, April 2015.
[3] Shubhanandan Dubey, Rahul Jaiswal, Raunak Mishra, "DESIGN OF CHASSISOFSTUDENT FORMULA RACE CAR", IJRTER, Volume 03, Issue 03; March-2017.
[4] Boby George, Akhil T Benny, Albert John, Aswin Jose, Denny Francis, "Design and Fabrication of Steering and Bracking System for All Terrain Vehicle", IJSER, Volume 7, Issue 3, March-2016.
[5] Amberpreet Singh, Vaibhav Trehan, Inderjeet Singh Saini, "DESIGN OF STEERING SYSTEM OF FORMULA STUDENT RACE CAR", Volume 4 –No.2, April 2017.
[6] B. Lee, A. Khajepour, and K. Behdinan, Vehicle Stability through Integrated Active Steering and Differential Braking, SAE 2006 World Congress, April 2006
[7] Klier, W., Reinelt, W., Active Front Steering (Part 1) – Mathematical Modeling and Parameter Estimation, SAE technical paper 2004-01- 1102, SAE World Congress, Steering & Suspension Technology
Symposium. Detroit, USA, March 2004
[8] P. Koehn, Active steering-the BMW approach towards modernsteer-ing technology, SAE International, vol. 2004, 2004.
[9] Kim, H. S., Hwang, Y. S., Yoon, H. S., Dynamic Stress Analysis of a BusSystems", Proceedings of 2nd MSC worldwide automotive con-ference, MSC,2000. http://www.mscsoftware.com/support/library/conf/auto00/p03200.pdf
[10] Fermer, M., McInally, G., Sandin, G., "Fatigue Life Analysis of Volvo S80Bi-fuel", Proceedings of 1st MSC worldwide automotive confer-ence,MSC, 1999http://www.mscsoftware.com/support/library/conf/auto99/p00499.pdf
[11] Johansson, I., and Gustavsson, M., "FE-based Vehicle Analysis of HeavyTrucks Part I" Proceedings of 2nd MSC worldwide automotive conference,MSC, 2000 www.mscsoftware.com/support/library/conf/auto00/p01200.pdf
[12] Parnell, T., White, C., and Day, S., "Finite Element Simulation of 1800 Rollover for Heavy Truck Vehicles", ASCE Engineering mechanicconference, Baltimore, 1999. http://citeseer.ist.psu.edu/407030.html
[13] Chiba, S., Aoyama K., Yanabu, K., Tachibana, H., Matsuda, K., Uchikura, M., "Fatigue Strength Prediction of Truck Cab by CAE", Journal ofMitsubishi Motors TechnicalReview, Vol.15, 2003, pp. 54-60.
[14] Lee, J. N., Nikravesh, P. E., "Steady State Analysis ofMultibody Sys-tems with Reference to Vehicle Dynamics", Journal ofNonlinear Dy-namics, Vol. 5, 1994, pp. 181-192.http://www.springerlink.com/content/jwu5842568731t84
[15] William F. Milliken and Douglas L. Milliken, 1995, "Race Car Vehicle Dynamics", Society of Automotive Engineers, Inc.
[16] Gaffney, Edmund F., and Anthony R. Salinas. Introduction to Formula SAE® Suspension and Frame Design. No. 971584. SAE Technical Paper, 1997
[17] Gillespie, Thomas D., Fundamentals of Vehicle Dynamics. Society of Automotive Engineers, Inc., Pennsylvania, 1992
[18] Theory of Machine (Third Edition) Publisher: Pearson Education Publication Date: 2009; Edition: 3rd edition.
[19] Rizzo, G. (2010), Automotive Applications of Solar Energy, IFAC Symposium Advances in Automotive Control, July 12 - 14 2010, Munich, Germany.
[20] Arsie I, Rizzo G, Sorrentino M "A Model for the Optimal Design of a Hybrid Solar Vehicle", Review of Automotive

Engineering, Society of Automotive Engineers of Japan (JSAE), 2008, ISSN 1349-4724. 29-3: 439-447
[21] John Connors (2007), "Solar Vehicles and Benefits of the Technology", ICCEP Paper.
[22]. D. Metz, mechanical engineering1983,105(1),80 2. "SOLAR VEHICLES AND BENEFITS OF THE TECHNOLOGY", by John Connors, ICCEP paper 2007.
[23]. J. Connors, "On the subject of solar vehicles and the benefits of the technology," in Proc. ICCEP'07, 2007.
[24]. Intelligent solar powered automobile-ventilation system," Applied Energy, vol. 80, pp.141–154, 2005.
[25]. K. D. Huang, S.-C. Tzeng, W.-P. Ma, and M.-F. Wu, "5. Rizzo, G. (2010), Automotive Applications of Solar Energy, IFAC Symposium Advances in Automotive Control, July 12 - 14 2.
[26]. Renewable Energy, Solar Energy http://en.wikipedia.org/wiki/Renewable_energy Solar energy,
[27]. Mohammad Asadul Hague and Jabalpur Rahman, "Power Crisis and Solution in Bangladesh" Bangladesh J. Sci. Ind. Res. 45(2), 155-162,2010Power and Energy Sector Road Map: An Update, June 2011
[28] 2018 Formula SAE® Rules, SAE International, India.
[29] ESVC India, https://www.worldsolarproject.com/
[30] ESVC India, https://www.worldsolarproject.com/about-us-01/

I.

