RESEARCH ARTICLE OPEN ACCESS

DESIGNAND DEVELOPMENT OF AN AGRIBOT

Mrs.M.Vijaya Lakshmi[1], A.Manoj[2], B.Nandini[3], N. Mahima[4], N.Lokesh[5]
(Associate. Prof , ECE Dept, Siddartha institute of science and Technology, Puttur, A.P, India)[1]
(B.Tech. IV Year Student, ECE Dept, Siddartha institute of science and Technology, Puttur, A.P, India)[2]
(B.Tech. IV Year Student, ECE Dept, Siddartha institute of science and Technology, Puttur, A.P, India)[3]
(B.Tech. IV Year Student, ECE Dept, Siddartha institute of science and Technology, Puttur, A.P, India)[4]
(B.Tech. IV Year Student, ECE Dept, Siddartha institute of science and Technology, Puttur, A.P, India)[5]
(Email.id:-berisettygarinandini@gmail.com)

----------**********----------

Abstract:

Indian economy relies on agriculture.The backbones for food production square measure farmers. Historically farming is finished by person with the assistance of bullock carts,tractors and tillers etc. In epoch, the most downside in agricultural field embrace lack of labour accessibility, lack of data concerning soil testing, increase aborning wages, wastage of seeds and additional wastage in water.To beat this downside we tend to approach planning of agricultural golem for numerous tasks.Actually robots square measure enjoying a very important role within the field of agriculture for farming method autonomously.In agriculture, the chance for golem is enhancing the protectivity and therefore the robots square measure showing within the field in sizable amount. The planned system consists of a robotic platform that focuses on implementing all the farming method particularly within the field of watering and seeding by exploitation microcontroller,dc motors,dc pumps etc.

----------**********----------

I.INTRODUCTION

Agriculture is that the backbone of rural asian country. Farmers face issues like lack of timely handiness of economical hands, as several have migrated from country facet. Hence, to scale back the burden of farmers, automation within the field of farming is critical. The main reason behind automation of farming processes a saving the time and energy needed for performing arts repetitive farming tasks and increasing the productivity of yield by treating each crop on an individual basis victimization exactness farming idea. The mechanism is in a position to mechanically seed and water, spray pesticides according the trail set by the user victimization the that was developed conjointly observe the malady that in plants by victimization mat science laboratory analysis.

II RELATEDWORK

From the existing method we have developed watering and fertilizing with the same device and haveused bluetooth to control the actions of the designed agribot.As a development of our project, we are using . solar power for charging the battery through which agribot receives energy to work in field.By introducing PH sensor to our proposed system it predicts the acidity and alkalinity of soil.

III.METHODOLOGY

The total progresses of the process are done inthis methodology by using the materials which are used their process also explained clearly.

A.ARDUINO UNO

The uno with cable is a micro-controller board base on the atmega328. It's fourteen digital input/output pins(of the six are often used as PWM outputs);six analog inputs, a sixteen megacycle ceramic resonator, a USB affiliation, an influence jack, associate degree ICSP header, and a push. It contains everything have to be compelled to support the micro controller; merely connect it to a laptop with a USB cable or power it with associate degree ac-to-dc adapter or battery to urge started.

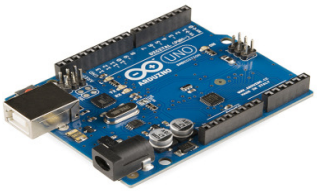

Fig 1:-Arduino uno

B.NODE MCU

NodeMCU comes with variety of GPIO pins. Following figure shows the pinout of the board.There is a candid distinction between VIN and VU wherever former is that a regulated voltage which will stand somewhere between 7 to 12 V whereas later is that the power voltage for USB that has got to be unbroken around 5V.Node MCU V3 is principally employed in the Wi-Fi applications that most of the opposite embedded modules fail to method unless in corporate with some external Wi-Fi protocol. Following are some major applications used for NodeMCU V3.

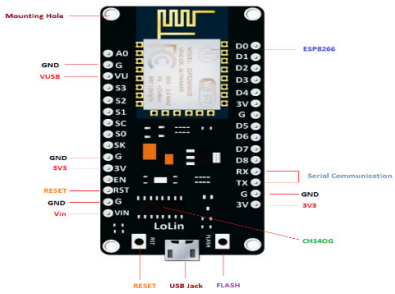

Fig 2:-NODE MCU

C.MOTOR DRIVER

L293D could be a typical motor driver or motor driver IC that permits DC motor to drive on either direction. L293D could be a 16-pin IC which may management a group of 2 DC motors at the same time in any dc motor direction. It means you'll management 2 with one L293D IC. Twin H-bridge motor driver computer circuit(IC).

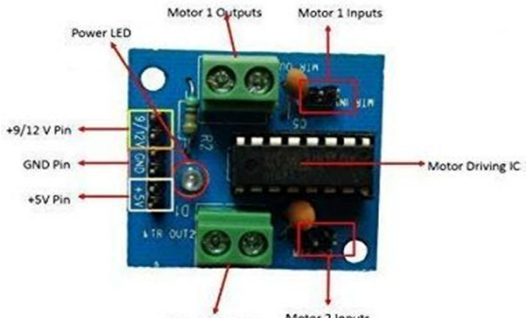

Fig 3:- Motor driver

D.DC MOTOR

A machine that converts DC power into a mechanical power is known as dc motors. Its operation relies on the principle that when a current carrying conductor is placed throughout a field of force, the conductor experiences a mechanical force.

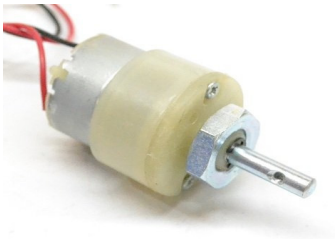

Fig 4:-DC motor

E.BATTERY

A rechargeable battery is mostly a lot of smart and property replacement to one-time use batteries, that generate current through a chemical change during which a reactive anode is consumed. The anode in an exceedingly reversible battery gets consumed still however at a slower rate, allowing several charges and discharges.

Fig 5:-Battery

F.RELAY

A relay is an electromagnetic switch that is used to turn on and turn off a circuit by low power signal, or where several circuits must be controlled by one signal.

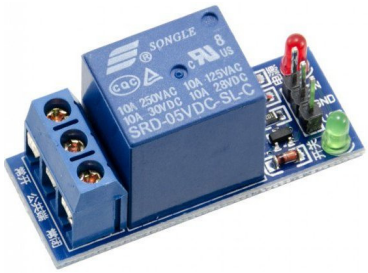

Fig 6:-Relay

G.WATER PUMP

The core concept of a water pump is to use a motor to convert rotational energy or kinetic energy and turn it into energy for moving fluid or for fluid flow (hydrodynamic energy).The process of this increases the velocity and pressure of the fluid and directs it toward the outlet of the pump.

Fig 7:-Water pump

H.SERVO MOTOR

A servo motor could be a form of motor that may rotate with nice exactitude. If you wish to rotate in associate in Nursing object at some specific angles or distance, then you employ a servo motor. Its simply created of a straightforward motor that runs through a servo mechanism.

Fig 8:-Servo motor

I.SOLAR PANEL

A photovoltaic cell panel, solar electrical panel, photo-voltaic(PV) module or simply solar battery is associate in Nursing assembly of photovoltaic cells mounted in a exceedingly framework for installation. Star panels used daylight as a supply of energy to come up with electrical energy electricity.

Fig 9:-Solar panel

J.PH SENSOR

PH (Potential Hydrogen) meter is a device used to measure acidity and alkalinity levels in water, soil and photo chemicals.

Fig 10:-PH sensor

IV. CODING FOR ROBOT CONTROL

```
/* include libraries*/
#include <Servo.h>
Servo m_1;
Servo m_2;
/*defining pins*/
int r1=2,r2=3,l1=4,l2=5;//robot
int relay=13;
/*general variable declaration*/
int received = 0;
char inputByte;
char state;
int pos;

void setup()
{
Serial.begin(9600); //enabling serial communication
  /*Assighning pins as inputs or outputs*/
```

```
pinMode(r1,OUTPUT);
pinMode(r2,OUTPUT);
pinMode(l1,OUTPUT);
pinMode(l2,OUTPUT);
pinMode(relay,OUTPUT);
 /*Assigning whether inputs are initially LOW or
HIGH*/
digitalWrite(r1,LOW);
digitalWrite(r2,LOW);
digitalWrite(l1,LOW);
digitalWrite(l2,LOW);
digitalWrite(relay,LOW);
 //defining Servo pins as PWM pins  6, 9
  m_1.attach(6);
  m_1.write(0); // SERVO ANGLE ZERO
  m_2.attach(9);// SERVO ANGLE ZERO
  m_2.write(0);
 }
void loop()
{
 /* Reading serial data */
  while (Serial.available()>0)
  {
inputByte = Serial.read();
delay(10);

 //// FRONT
 if(inputByte=='f')
 {
digitalWrite(r1,LOW);
digitalWrite(r2,HIGH);
digitalWrite(l1,HIGH);
digitalWrite(l2,LOW);
  }
//// BACK
 else if(inputByte=='b')
 {
digitalWrite(r1,HIGH);
digitalWrite(r2,LOW);
digitalWrite(l1,LOW);
digitalWrite(l2,HIGH);
  }
  //// RIGHT
 else if(inputByte=='r')
 {
digitalWrite(r1,HIGH);
digitalWrite(r2,LOW);
digitalWrite(l1,LOW);
digitalWrite(l2,LOW);

  }
  //// LEFT
  else if(inputByte=='l')
 {
digitalWrite(r1,LOW);
digitalWrite(r2,LOW);
digitalWrite(l1,LOW);
digitalWrite(l2,HIGH);

  }
  ////STOP
   else if(inputByte=='s')
 {
digitalWrite(r1,LOW);
digitalWrite(r2,LOW);
digitalWrite(l1,LOW);
digitalWrite(l2,LOW);
delay(1000);

// digitalWrite(relay,LOW);

  //for(pos=90;pos>=0;pos--){
m_2.write(0);
//delay(15);
 // }
//delay(1000);

  //for(pos=90;pos>=0;pos--){
m_1.write(0);
//delay(15);
  //}
 }
 ///WATERING
   else if(inputByte=='w')
 {
digitalWrite(relay,HIGH);
   //delay(4000);
 //digitalWrite(relay,LOW);
  }
  ///SEEDING
else if(inputByte=='d')
 {
  for(pos=0;pos<=90;pos++){
m_1.write(pos);
delay(15);
}
  }
  ///PLOUGHING
  else if(inputByte=='p')
 {

for(pos=0;pos<=90;pos++){
m_2.write(pos);
delay(15);
}
  }
  ///NO WATERING
  else if (inputByte=='o')
  {
digitalWrite(relay,LOW);
  }
  }
}
```


V.CODING FOR NODE MCU

```
/* include libraries*/
#define BLYNK_TEMPLATE_ID "TMPLQy79mQJ8"
#define BLYNK_PRINT Serial
#include <ESP8266WiFi.h>
#include "BlynkSimpleEsp8266.h"
#include <WiFiClient.h>;
#include <ThingSpeak.h>;
#define APP_DEBUG
/*defining pins*/
int ph_sensor=A0;
/*general GLOBAL variable declaration*/
char auth[] = "QFF_hwZr5S5Uq1nKlNVMvhAa0YyVPBpm";
char ssid[] = "Agribot";
char pass[] = "robotrobot";
WiFiClient client;
BlynkTimer timer;
unsigned long myChannelNumber = 1690244; //Your Channel Number (Without Brackets)
const char * myWriteAPIKey = "ACNOJL8HHR6N1T2D"; //Your Write API Key
float ph_value=0,PH_VAL=0;
int pinValue0;
int pinValue1;
int pinValue2;
int pinValue3;
int pinValue4;
int pinValue5;
int pinValue6;
int pinValue8;
int pinValue7;
/*Instances for blynk App*/
BLYNK_WRITE(V0)
{
  pinValue0 = param.asInt();
  if (pinValue0 == 1)
  {

Serial.print('f'); //sending character 'f' to arduino
  }
  if (pinValue0 == 0)
  {

  }
}
BLYNK_WRITE(V1)
{
  pinValue1 = param.asInt();
  if (pinValue1 == 1)
  {

Serial.print('b');//sending character 'b' to arduino
  }
  if (pinValue1 == 0)
  {

  }
}
//BLYNK APP OPERATIONS
BLYNK_WRITE(V2)
{
  pinValue2 = param.asInt();
  if (pinValue2 == 1)
  {

Serial.print('l');//sending character 'l' to arduino
  }
  if (pinValue2 == 0)
  {

  }
}
BLYNK_WRITE(V3)
{
  pinValue3 = param.asInt();
  if (pinValue3 == 1)
  {
Serial.print('r');//sending character 'r' to arduino
  }
  if (pinValue3 == 0)
  {

  }
}
BLYNK_WRITE(V4)
{
  pinValue4 = param.asInt();
  if (pinValue4 == 1)
  {
Serial.print('s');//sending character 's' to arduino
  }
  if (pinValue4 == 0)
{

}
//BLYNK APP OPERATIONS ENDED HERE
BLYNK_WRITE(V5)
```



```
{
  pinValue5 = param.asInt();
  if (pinValue5 == 1)
  {
Serial.print('p'); //sending character 'p' to arduino
  }
```

VI.OVERVIEWOFPROPOSEDWORK

Proposed system consists of ARDUINO microcontroller, battery, Motor driver, dc motor,PH sensor and a Servo Motor. Soil pH sensor used to measure the acidity or alkalinity of a soil.Servo Motor is used for Seed Sowing and is connected with Arduino and switch to control the whole assembly.

The hardware of this is mounted on robotic chassis. DC motors are used to drive the wheels connected to the system. Motor driver is used to drive the DC motors. The system direction is provided by embedding the commands into the Arduino microcontroller. Switch is connected to on/ off the robot. Proposed agribot will work using solar energy (renewable energy).

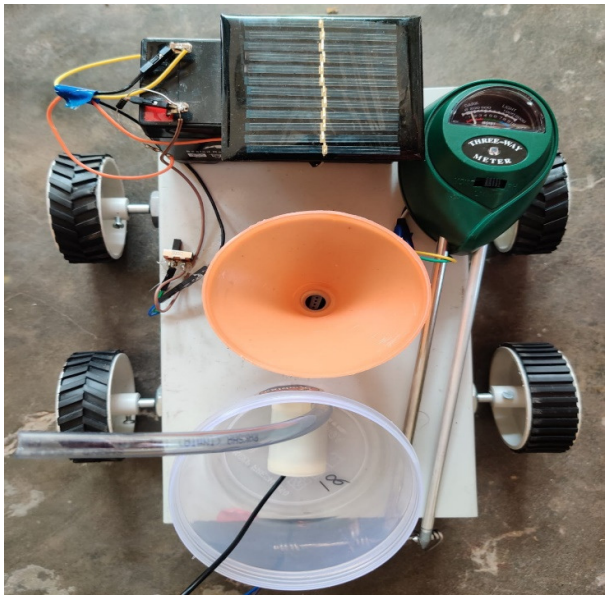

Fig 11: - Final hardware output (front view)

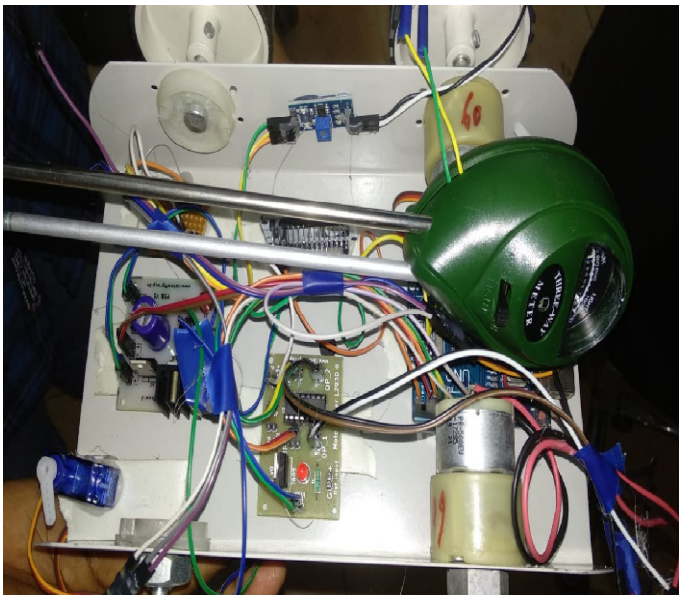

Fig 12: - Final hardware output (back view)

VII. BLOCK DIAGRAM

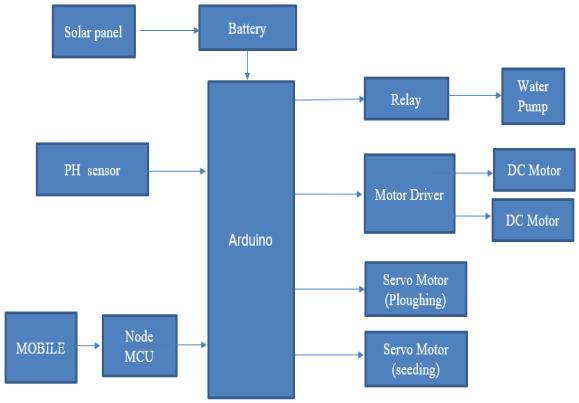

Fig 13: - BLOCK DIAGRAM

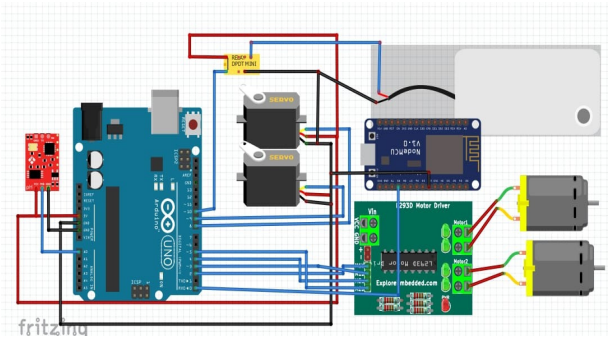

Fig 14: - Connections view of AGRIBOT

VIII.CONCLUSIONS

This project introduces wireless technology in the field of agriculture. Exploits features of Android platform to help Farmers Significantly. Provides a flexible user interface to farmer to control the machine effectively. It reduces manual labour requirement which is a boon to the farmers as finding laborers is a very difficult job today. The Agribot can work in any sort of climatic condition as well as can work nonstop unlike humans. The time required to carry out the five functionalities reduces considerably in comparison with carrying out the same activities manually. It is a onetime investment which reduces the overall farming cost considerably. This Agribot acts as a gateway to automated smart farming. An attempt has been made to develop a Bluetooth operated agricultural robot which performs ploughing, seed sowing and mud levelling operations. The proposed system is battery operated and controlled by Bluetooth device. Using this robot, farmer can carry out other secondary activity along with operating the robot. By carrying out multiple activities at the same time, farmer can increase his income which results in development of Indian economy. In future, the Agri-bot autonomous for performing the various agricultural operations. It is evident from the research that there is a significant potential for applying the autonomous system in various agricultural processes, where it is possible to impose adequate safety regulation system at a reasonable cost. We need to add AI for this to improve the future performance of this project. We can use night vision camera for monitoring night times. We need to add ML&AI automation towards selfsystem and self-analysis for plant diseases.

IX. REFERENCES

[1] “Agricultural Robot for Automatic Ploughing and Seeding” 2015 IEEE International Conference on Technological Innovations in ICT (TIAR 2015) (Amrita Sneha.A, Abirami.E, Ankita.A, Mrs. R. Praveen, Mrs. R. Srimeena).

[2] “Design and Implementation of Seeding Agricultural Robot” (JIRAS) (P.Usha, V. Maheswari, Dr. V. Nandagopal)

[3]. “Automated Farming Using Microcontroller and Sensors” (IJSRMS) ISSN: 23493371 (Abdullah Tanveer, Abhishek Choudhary, Divya Pal, Rajani Gupta, Farooq Husain) Farming can be done using new technologies to yield higher growth of the crops.

[4] “IOT Based Smart Agriculture” IJARCCE June 2016 (Nikesh Gondchawar1, Prof. Dr. R. S. Kawitkar2)

[5] Sachin .D.Khirade, A.B.patil,” Plant disease detection Using image processing,”2015, International conference on computing communication control and automation, IEEE.

[6] Vijaisingh, Varsha, A.K.Mishra,”Detection of unhealthy region of plant leaves using image processing and genetic algorithm”, 205, ICA CEA, India.

[7] Monica Jhuria, Ashwani kumar and RushikeshBorse,”Image processing for Smart farming, detection of Disease and Fruit Grading,” proceeding of the 2013, IEEE, second international conference on image Information processing.

[8]Mrunalani.R.Badnakhe,Prashant.R.Deshmukh ,”Infected leaf analysis and comparison by otsu threshold and K means clustering, ”International journal of advanced research in computer science and software engineering,volu me2,Issue 3,march 2012.

[9]Nithin P V,Shivaprakash S,”Multipurpose agricultural robot”,International Journal of Engineering Research,ISSN: 2319-6890) (online),2347-5013(print) Volume No.5 Issue:Special 6, pp:1129-1254.

[10] Ms.Aditi D.kokate,prof. priyanka D.yadav,”Multipose Agricultural robot”,International Advanced Research journal in Science,Engineering and Technology National Conference on Emerging trends in Electronics & Telecommnication Engineering(NCETETE 2017),ISSN(online) 2393-8021 ISSN(print)2394-1588.

